TOWN OF COTTESLOE

COTTESLOE, WA

RAILWAY CORRIDOR GREENING DESIGN

AUGUST 2019

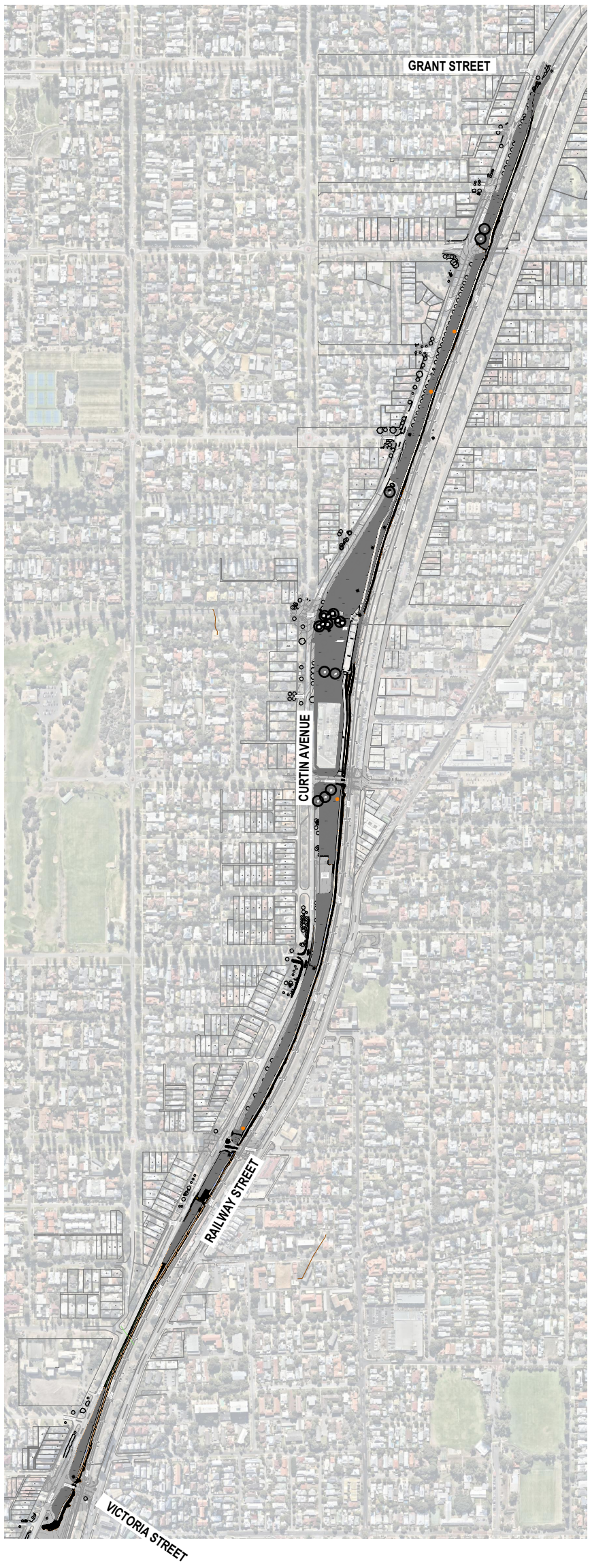

SHEET TABLE LIST			
DRAWING NO.	DRAWING TITLE	Sheet Rev2 Date	Sheet Rev2 No
TITLE SHEETS			
DD-001	COVER PAGE	04/09/2019	B
DD-002	OVERALL SITE PLAN	04/09/2019	B
PLANT SCHEDULE			
DD-100	PLANT SCHEDULE	04/09/2019	B
DD-101	PLANT SCHEDULE	04/09/2019	B
DD-102	PLANT SCHEDULE	04/09/2019	B
DD-103	PLANT SCHEDULE	04/09/2019	B
PLANTING PLAN			
DD-200			
DD-201	PLANTING PLAN	04/09/2019	B
DD-202	PLANTING PLAN	04/09/2019	B
DD-203	PLANTING PLAN	04/09/2019	B
DD-204	PLANTING PLAN	04/09/2019	B
DD-205	PLANTING PLAN	04/09/2019	B
DD-206	PLANTING PLAN	04/09/2019	B
DD-207	PLANTING PLAN	04/09/2019	B
DD-208	PLANTING PLAN	04/09/2019	B
DD-209	PLANTING PLAN	04/09/2019	B
DD-210	PLANTING PLAN	04/09/2019	B
DD-211	PLANTING PLAN	04/09/2019	B
DD-212	PLANTING PLAN	04/09/2019	B
DD-213	PLANTING PLAN	04/09/2019	B
DD-214	PLANTING PLAN	04/09/2019	B
TYPICAL DETAILS			
DD-300	TYPICAL DETAILS	04/09/2019	B
DD-301	TYPICAL DETAILS	04/09/2019	B
SPECIFICATIONS			
DD-400	SPECIFICATIONS	04/09/2019	A

FINAL ISSUE

----	----	----
----	----	----
----	----	----
----	----	----
----	----	----
----	----	----
----	----	----
----	----	----
----	----	----
04/09/2019	FINAL ISSUE	B
22/08/2019	ISSUE FOR REVIEW	A
DATE	DESCRIPTION	REV

PROJECT TITLE

TOWN OF COTTESLOE

RAILWAY CORRIDOR GREENING DESIGN

COTTESLOE, WA

DRAWING TITLE

COVER PAGE

N

PROJECT NO.	SCALE @ A3	PLOT DATE	REVISION
1912	N.T.S	04/09/2019	B

FILE PATH
P:\07 PROJECTS COMMERCIAL\1912 TOC RAIL CORRIDOR GREENING\08 DRAWINGS\02 JBA\03 DETAILED DESIGN\04 SHEET SET MANAGER

DRAWN	CHECKED	APPROVED	DRAWING NO.
MC	PV	MG	DD-001

JOSH BYRNE & ASSOCIATES

LANDSCAPE • SUSTAINABILITY • COMMUNICATIONS

08 9433 3721
Suite 109, Atwell Buildings
3 Cantonment Street, Fremantle WA 6160
PO Box 1866, Fremantle WA 6959
www.joshbyrne.com.au

NOTE: CHECK ALL DIMENSIONS ON SITE PRIOR TO COMMENCING WORK. WRITTEN DIMENSIONS SHALL TAKE PRECEDENCE. ALL DRAWINGS TO BE READ IN CONJUNCTION WITH MANUFACTURERS AND CONSULTANTS DOCUMENTATION AND SPECIFICATION. REPORT ANY DISCREPANCIES TO LANDSCAPE ARCHITECT BEFORE PROCEEDING WITH WORK.

COPYRIGHT ©: THIS DOCUMENT MAY ONLY BE USED FOR THE PURPOSE FOR WHICH IT WAS COMMISSIONED IN ACCORDANCE WITH THE TERMS OF ENGAGEMENT.

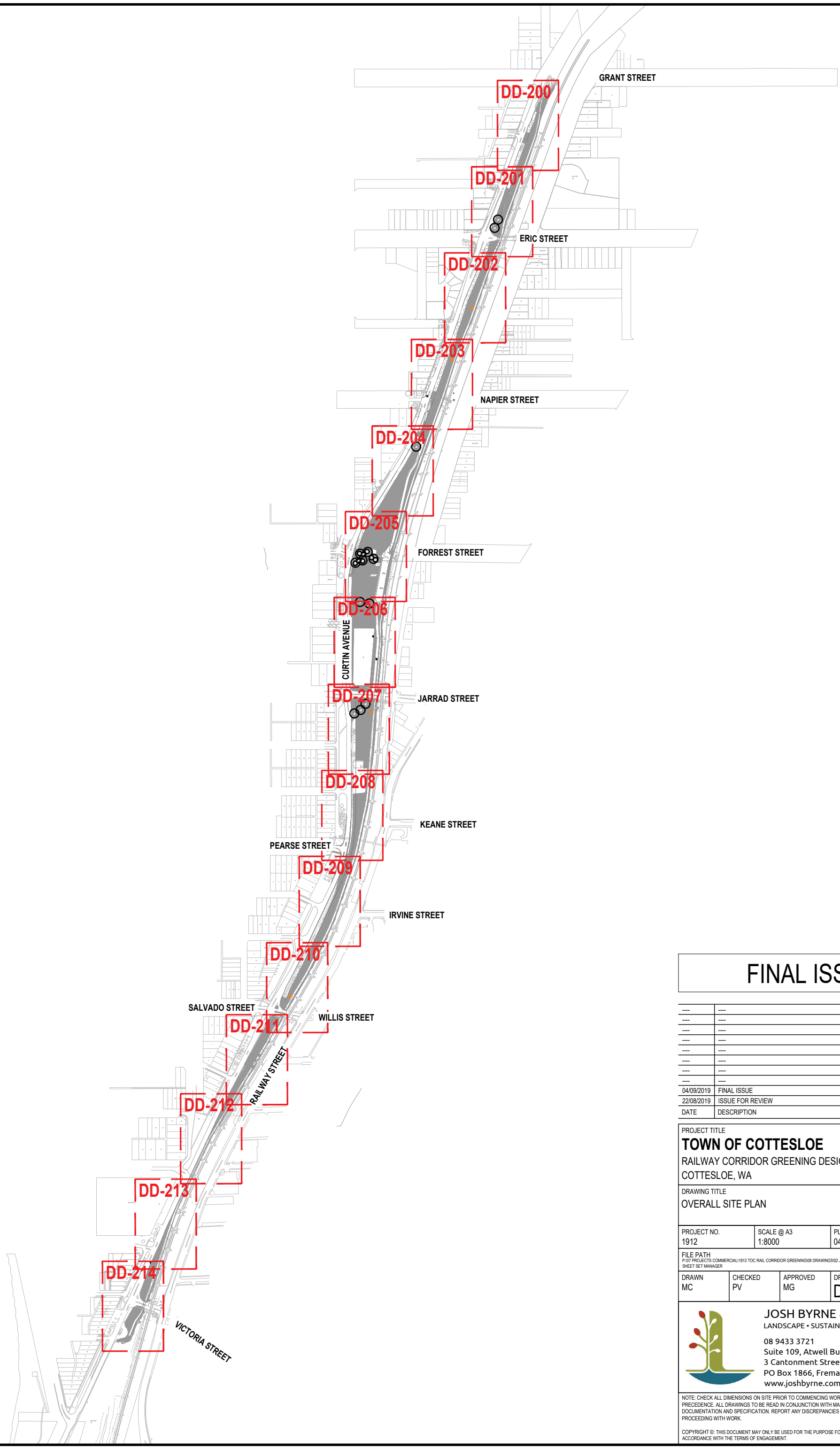

FINAL ISSUE

DATE	DESCRIPTION	REV
----	----	----
----	----	----
----	----	----
----	----	----
----	----	----
----	----	----
----	----	----
----	----	----
04/09/2019	FINAL ISSUE	B
22/08/2019	ISSUE FOR REVIEW	A

PROJECT TITLE

TOWN OF COTTESLOE

RAILWAY CORRIDOR GREENING DESIGN

COTTESLOE, WA

DRAWING TITLE

OVERALL SITE PLAN

N

PROJECT NO.	SCALE @ A3	PLOT DATE	REVISION
1912	1:8000	04/09/2019	B

FILE PATH
P:\07 PROJECTS COMMERCIAL\1912 TOC RAIL CORRIDOR GREENING\08 DRAWINGS\02 JBA\03 DETAILED DESIGN\04 SHEET SET MANAGER

DRAWN	CHECKED	APPROVED	DRAWING NO.
MC	PV	MG	DD-002

JOSH BYRNE & ASSOCIATES
LANDSCAPE • SUSTAINABILITY • COMMUNICATIONS

08 9433 3721
Suite 109, Atwell Buildings
3 Cantonment Street, Fremantle WA 6160
PO Box 1866, Fremantle WA 6959
www.joshbyrne.com.au

NOTE: CHECK ALL DIMENSIONS ON SITE PRIOR TO COMMENCING WORK. WRITTEN DIMENSIONS SHALL TAKE PRECEDENCE. ALL DRAWINGS TO BE READ IN CONJUNCTION WITH MANUFACTURERS AND CONSULTANTS DOCUMENTATION AND SPECIFICATION. REPORT ANY DISCREPANCIES TO LANDSCAPE ARCHITECT BEFORE PROCEEDING WITH WORK.

COPYRIGHT ©: THIS DOCUMENT MAY ONLY BE USED FOR THE PURPOSE FOR WHICH IT WAS COMMISSIONED IN ACCORDANCE WITH THE TERMS OF ENGAGEMENT.

GENUS / SPECIES	NOONGAR'/COMMON NAME	HEIGHT (m)	WIDTH/ SPACING (m)	No. OF PLANTS	TOTAL AREA (m²)	LIN m
LANDSCAPE RETAINING MIX (per 100m2)						
Trees (Overlay - if appropriate)						
Agonis flexuosa	Wonnil'/ Peppermint Tree	to 10m	10	0.05	0.5	
Allocasuarina fraseriana	Western Sheoak	to 10m	6	0.05	0.3	
Banksia attenuata	Biara'/ Candlestick Banksia	to 10m	2	0.2	0.4	
Banksia grandis	Bull Banksia	1.5-10m	2	0.2	0.4	
Banksia menziesii	Firewood Banksia	to 7m	2	0.2	0.4	
Banksia prionotes	Acorn Banksia	to 10m	2	0.2	0.4	
Eucalyptus argutifolia	Yanchep mallee	to 4m	3	0.2	0.6	
Eucalyptus decipiens	Redheart Moit/ Limestone Marlock	6	3	0.2	0.6	
Eucalyptus foecunda	Fremantle Mallee	to 5m	2	0.2	0.4	
Eucalyptus petrensis	Koodjat'/ Limestone mallee	to 4m	3	0.2	0.6	
Eucalyptus todtiana	Coastal Blackbutt	2-15m	3	0.2	0.6	
TOTAL NUMBER OF PLANTS				**1.9**		
TOTAL AREA (m²)					**5**	
Atriplex cinerea	Grey Salt Bush	1.5	1.5	3	4.5	
Banksia attenuata (Dwarf)	Biara'/ Candlestick Banksia	1.5	1.5	3	4.5	
Banksia dallanneyi/nivea	Couch Honeypot	0.1	1	4	4	
Banksia grandis (Dwarf)	Little Bull Banksia	1.5	1.5	3	4.5	
Banksia menziesii (Dwarf)	Firewood Banksia	1.5	1.5	3	4.5	
Banksia prionotes (Dwarf)	Acorn Banksia	1.5	1.5	3	4.5	
Carpobrotus virescens	Coastal Pigface	0.1	2.5	2	5	
Conostylis candicans	Grey Cottonheads	0.5	0.25	12	3	
Eremophila glabra		0.3	1	5	5	
Ficinia nodosa	Knotted Club Rush	1	0.5	8	4	
Gastrolobium nervosum		0.5	1	4	4	
Grevillea crithmifolia		0.3	3	2	6	
Grevillea preissii		0.5	1	4	4	
Hemiandra pungens	Snakebush	0.1	1	3	3	
Jacksonia calcicola		0.2-0.6	1.5	3	4.5	
Jacksonia sericea	Waldjumi'	0.2-0.6	1.5	3	4.5	
Melaleuca huegelii (prostrate)	Prostrate Chenille Honey Myrtle	0.2	2	3	6	
Olearia axillaris	Coastal Daisy Bush	1.5	1.5	4	6	
Scaevola crassifolia	Thick leaved Scaevola	1.5	1.5	3	4.5	
Westringia dampieri	Coastal Rosemary	1.5	1	4	4	
TOTAL NUMBER OF PLANTS				**79**		
TOTAL AREA (m²)					**100**	
TOTAL PLANTS PER 100m² (Average of Upper bank, Midbank and Basin)						

GENUS / SPECIES	NOONGAR'/COMMON NAME	HEIGHT (m)	WIDTH/ SPACING (m)	No. OF PLANTS	TOTAL AREA (m²)	LIN m
SWALE MIX (per 100m²)						
Trees - Upper Bank						
Banksia attenuata	Biara'/ Candlestick Banksia	to 10	2	5	10	
Banksia grandis	Bull Banksia	1.5-10	2	5	10	
Banksia menziesii	Firewood Banksia	to 7	2	5	10	
Banksia prionotes	Acorn Banksia	to 10	2	5	10	
Eucalyptus rudis	Flooded Gum	to 15	1	5	5	
Melaleuca lanceolata	Rottnest Island Teatree	5	3	5	15	
Upper Bank						
Acacia alata	Winged Wattle	1	0.5	5	2.5	
Allocasuarina lehmanniana	Dune Sheoak	to 5	1	5	5	
Grevillea preissii		0.5	1	5	5	
Hibbertia glossularifolia		3	1.5	3	4.5	
Jacksonia furcellata	Grey Stinkwood	3	1	6	6	
Jacksonia sternbergiana	Green Stinkwood	3	1	6	6	
Lobelia anceps	Angled Lobelia	to 1.2	0.5	5	2.5	
Pattersonia occidentalis	Purple Flag	to 1.5	0.5	7	3.5	
Vininarea juncea	Swishbush	1 to 4	1	5	5	
TOTAL NUMBER OF PLANTS (UPPERBANK)				**77**		
TOTAL AREA (m²)					**100**	
Midbank						
Allocasuarina lehmanniana	Dune Sheoak	to 5	1	12	12	
Conostylis aculeata	Prickly Conostylis	0.5	0.5	15	7.5	
Ficinia nodosa	Knotted Club Rush	1	0.5	15	7.5	
Hibbertia subvaginata		0.5	0.5	12	6	
Isolepis cernua	Nodding Club Rush	0.3	0.33	21	7	
Lepidosperma gladiatum	Coastal Sword-sedge	1.5	1.5	7	10.5	
Lobelia anceps	Angled Lobelia	0.5	0.5	15	7.5	
Melaleuca teritifolia	Banbar'	1 to 5	1	8	8	
Myoporum caprarioides	Slender Myoporum	3	1.5	8	12	
Pattersonia occidentalis	Purple Flag	1	0.5	15	7.5	
Vininarea juncea	Swishbush	1 to 4	1.5	10	15	
TOTAL NUMBER OF PLANTS (MIDBANK)				**138**		
TOTAL AREA (m²)					**100**	
Trees - Basin						
Melaleuca cuticularis	Saltwater Paperbark	1 to 7	2	7	14	
Melaleuca preissiana	Modong'/Moonah	to 10	3	5	15	
Melaleuca rhaphiophylla	Swamp Paperbard	to 8	3	5	15	
Basin						
Acacia willdenowiana	Grass Wattle	0.3-0.6	0.5	15	7.5	
Anigozanthos humilis	Cats Paw	0.1-1	0.5	15	7.5	
Aotus gracillima		0.6-2	1	10	10	
Bolboschoenus caldwellii	Marsh Club-rush	1.2	0.5	20	10	
Isolepis cernua	Nodding Club Rush	0.3	0.33	27	9	
Melaleuca teritifolia	Banbar'	1 to 5	2	6	12	
TOTAL NUMBER OF PLANTS (BASIN)				**110**		
TOTAL AREA (m²)					**100**	
TOTAL PLANTS PER 100m² (Average of Upper bank, Midbank and Basin)				**108.3**		

Physical Environment Classifications

The Rail Corridor Area is classified under the following complexes:

Landform Complex - Spearwood Dune System
- The landform is identified as being within the Spearwood Dune System. This consists of shallow yellow brown sand and exposed limestone

Soil Complex - Spearwood Sand
- The soil type is identified as Spearwood Sand. This consists of pale and olive-yellow, medium to coarse grained feldspar, moderately sorted, of residual origin.

Vegetation Complex - Cottesloe - Central and South
- The vegetation type is identified as Cottesloe - Central and South. This consists of a mosaic woodland of Tuarts, Jarrah and Marri, and closed heath of the limestone outcrops

Planting Design

The planting design utilises the Physical Environment Classifications and divides the space into different typologies using the following guidelines:

Retaining mix
- Ground covers, grasses and low shrubs that stabilise and retain steep areas
- Small Trees (where appropriate) for further bank stabilisation, visual screening and sound blocking of the train line
- Showcasing texture and flowering plants

Swale mix
- A mix of plants that can cope/thrive with occasional inundation (wet/ lower bank, mid bank, upper bank)
- Plants that will retain steep swale edges
- An opportunity to develop focussed Flora/Fauna hotspots in fenced off swale areas
- Illustration of a movement of water story, and our endemic species that lie in and along water courses and water stands

Feature mix
- Feature planting applied to the important public interface areas, such as the path to Cottesloe Beach, secondary paths which traverse the site and road intersections
- An attractive mix of ground covers, grasses and low shrubs that preserve sight lines
- Individual trees that do not impact on sight lines (no mid story)
- Showcasing form, texture, flowering plants and the beauty of local and endemic plants species

Woodland Mix, Open Woodland Mix, Heath Mix (development of the green corridor)
- Development of an important green corridor and a vital habitat, food and pollinator source for birds and local fauna species.
- Visually soften the train line and PSP and provide a sound inhibitor between local residents and the train line
- Provision of shade or areas to pause in shade along the PSP
- Includes different plant mixes to reflect a Cottesloe Woodland Vegetation Community with 'Woodland' of Tuart Jarrah and Marri, and understory of Banksia, 'Open Woodland' of Tuart, Jarrah, Marri and Banksia as well as smaller local Mallees, and 'Heath' with its coastal ridge planting. These mixes aim to achieve woodlands of trees with a diverse understory and the development of understory in areas with existing trees

Turf retention areas
- Areas which may be affected by Curtin Rd widening
- Areas retained to create parkland for the purpose of relaxation, games and dog exercise areas.

Screening mix
- A visual and aural screening tool for industrial areas such as the Power station that will provide a different focus and act as a sound inhibitor.

FINAL ISSUE

----	----	----
----	----	----
----	----	----
----	----	----
----	----	----
----	----	----
----	----	----
----	----	----
04/09/2019	FINAL ISSUE	B
22/08/2019	ISSUE FOR REVIEW	A
DATE	DESCRIPTION	REV

PROJECT TITLE
TOWN OF COTTESLOE
RAILWAY CORRIDOR GREENING DESIGN
COTTESLOE, WA

DRAWING TITLE
PLANT SCHEDULE

PROJECT NO.	SCALE @ A3	PLOT DATE	REVISION
1912	AS SHOWN	04/09/2019	B

FILE PATH
P:\07 PROJECTS COMMERCIAL\1912 TOC RAIL CORRIDOR GREENING\08 DRAWINGS\02 JBA\03 DETAILED DESIGN\04 SHEET SET MANAGER

DRAWN	CHECKED	APPROVED	DRAWING NO.
MC	PV	MG	DD-100

JOSH BYRNE & ASSOCIATES
LANDSCAPE • SUSTAINABILITY • COMMUNICATIONS

08 9433 3721
Suite 109, Atwell Buildings
3 Cantonment Street, Fremantle WA 6160
PO Box 1866, Fremantle WA 6959
www.joshbyrne.com.au

NOTE: CHECK ALL DIMENSIONS ON SITE PRIOR TO COMMENCING WORK. WRITTEN DIMENSIONS SHALL TAKE PRECEDENCE. ALL DRAWINGS TO BE READ IN CONJUNCTION WITH MANUFACTURERS AND CONSULTANTS DOCUMENTATION AND SPECIFICATION. REPORT ANY DISCREPANCIES TO LANDSCAPE ARCHITECT BEFORE PROCEEDING WITH WORK.

COPYRIGHT ©: THIS DOCUMENT MAY ONLY BE USED FOR THE PURPOSE FOR WHICH IT WAS COMMISSIONED IN ACCORDANCE WITH THE TERMS OF ENGAGEMENT.

GENUS / SPECIES	NOONGAR[1]/COMMON NAME	HEIGHT (m)	WIDTH/ SPACING (m)	No. OF PLANTS	TOTAL AREA (m²)	LIN m
FEATURE MIX (per 100m²)						
Tree (Options)						
Eucalyptus gomphocephala	Tuart	to 40m	20	10	200	
Corymbia maculata	Spotted Gum (Eastern States tree)	15-30	10	8	80	
TOTAL NUMBER OF TREES (45L)				**18**		
Shrub						
Acacia alata	Winged Wattle	1	0.5	4	2	
Anigozanthos humilis	Cats Paw	0.5-1	0.25	12	3	
Banksia attanuata (Dwarf)	Candlestick Banksia	1	1.5	2	3	
Banksia grandis (Dwarf)	Little Bull Banksia	1.5	1.5	2	3	
Banksia menziesii (Dwarf)	Firewood Banksia	1.5	1.5	2	3	
Banksia prionotes (Dwarf)	Acorn Banksia	1.5	1.5	2	3	
Conostylis aculeata	Prickly Conostylis	0.5m	0.5	6	3	
Conostylis candicans	Grey Cottonheads	0.5m	0.5	6	3	
Dianella Revoluta	Flax Lily	1	0.75	8	6	
Eremophila glabra	Tar Bush	0.3	1	4	4	
Ficinia nodosa	Knotted Club Rush	1	0.5	8	4	
Guichenotia ledifolia		1.5	1.5	7	10.5	
Hibbertia subvaginata	Grey-leaved Coastal Guinea Flower	0.5	0.5	7	3.5	
Leucophyta brownii	Cushion bush	1	1	7	7	
Pattersonia occidentalis	Western Patersonia	1	0.5	7	3.5	
Pimelia ferruginea	Rice Flower	0.3	1	7	7	
Westringina dampieri	Coastal Rosemary	1	1	7	7	
Groundcover						
Banksia dallanneyi/nuivea	Couch Honeypot	0.1	1	5	5	
Carpobrotus virescens	Coastal Pigface	0.1	1.5	5	7.5	
Grevillea crithmifolia		0.3	1.5	5	7.5	
Kennedia prostrata	Running Postman	0.1	1	4	4	
TOTAL NUMBER OF PLANTS				**117**		
TOTAL AREA (m²)					**100**	
TOTAL PLANTS PER 100m²				**117**		

GENUS / SPECIES	NOONGAR[1]/COMMON NAME	HEIGHT (m)	WIDTH/ SPACING (m)	No. OF PLANTS	TOTAL AREA (m²)	LIN m
CORRIDOR GREENING - WOODLAND (per 100m2)						
Trees (Overlay)						
Acacia saligna	Coojong'/ Golden Wreath Wattle	to 6m	3	0.1	0.3	
Agonis flexuosa	Wonnil'/ Peppermint Tree	to 10m	10	0.1	1	
Banksia attenuata	Biara'/ Candlestick Banksia	to 10m	2	0.5	1	
Banksia grandis	Bull Banksia	1.5-10m	2	0.5	1	
Banksia menziesii	Firewood Banksia	to 7m	2	0.5	1	
Banksia prionotes	Acorn Banksia	to 10m	2	0.5	1	
Corymbia calophylla	Marri	10-40m	20	0.1	2	
Eucalyptus gomphocephala	Tuart	to 40m	20	0.1	2	
Eucalyptus marginata	Jarrah	10-40m	6	0.1	0.6	
TOTAL NUMBER OF PLANTS				**2.5**		
TOTAL AREA (m²)					**10**	
Tall Shrubs - 3m+						
Grevillea vestita		to 3m	2	2	4	
Hakea prostrata	Harsh Hakea	1 to 3	1.5	3	4.5	
Hakea trifurcata	Two-leaved Hakea	1.5-3	2	2	4	
Melaleuca huegelii	Chenille Honeymyrtle	4	3	1	3	
Medium Shrubs - to 2m						
Acacia lasiocarpa	Panjang'	1.5	1.5	3	4.5	
Acacia pulchella	Prickly Moses	to 2m	0.75	2	1.5	
Allocasuarina humilis	Dwarf Sheoak	1.5	1.5	3	4.5	
Calothamnus sanguineus	Silky-leaved Blood Flower	1.5	1.5	3	4.5	
Calothamnus quadrifidus	One-sided Bottlebrush	2	2	2	4	
Guichenotia ledifolia		1.5	1.5	3	4.5	
Hakea lissocarpha	Honey Bush	1.5	1	4	4	
Logania vaginalis	White Spray	1.8	1.5	3	4.5	
Melaleuca systena	Coastal Honeymyrtle	1.5	1.5	3	4.5	
Myoporum insulare	Common Boobialla	2	2	2	4	
Rhagodia baccata	Berry Saltbush.	1.5	1.5	3	4.5	
Templetonia retusa	Cockies tongue	to 2	2	3	6	
Low Shrubs - to 1m						
Acacia alata	Winged Wattle	1	0.5	5	2.5	
Banksia dallanneyi/nivea	Couch Honeypot	0.1	1	2	2	
Eremophila glabra subsp. Alb.	Tar Bush	0.3	1	4	4	
Gompholobium tomentosum	Yellow Pea	0.5m	0.5	4	2	
Grevillea preissii		0.5	1	3	3	
Hibbertia subvaginata	Grey-leaved Coastal Guinea Flower	0.5	0.5	5	2.5	
Hypocallyma robustum	Swan River Myrtle	1	1	3	3	
Jacksonia sericea	Waldjumi'	0.6	1.5	3	4.5	
Phyllanthus calycinus	False Boronia	0.5	0.5	3	1.5	
Pimelea ferruginea		0.3	1	4	4	
Westringia dampieri	Coastal Rosemary	1	1	4	4	
TOTAL NUMBER OF PLANTS				**82**		
TOTAL AREA (m²)					**100**	
TOTAL PLANTS PER 100m²				**84.5**		

FINAL ISSUE

DATE	DESCRIPTION	REV
---	---	---
---	---	---
---	---	---
---	---	---
---	---	---
---	---	---
---	---	---
---	---	---
04/09/2019	FINAL ISSUE	B
22/08/2019	ISSUE FOR REVIEW	A

PROJECT TITLE
TOWN OF COTTESLOE
RAILWAY CORRIDOR GREENING DESIGN
COTTESLOE, WA

DRAWING TITLE
PLANT SCHEDULE

PROJECT NO.	SCALE @ A3	PLOT DATE	REVISION
1912	AS SHOWN	04/09/2019	B

FILE PATH
P:\07 PROJECTS COMMERCIAL\1912 TOC RAIL CORRIDOR GREENING\08 DRAWINGS\02 JBA\03 DETAILED DESIGN\04 SHEET SET MANAGER

DRAWN	CHECKED	APPROVED	DRAWING NO.
MC	PV	MG	DD-101

JOSH BYRNE & ASSOCIATES
LANDSCAPE • SUSTAINABILITY • COMMUNICATIONS
08 9433 3721
Suite 109, Atwell Buildings
3 Cantonment Street, Fremantle WA 6160
PO Box 1866, Fremantle WA 6959
www.joshbyrne.com.au

NOTE: CHECK ALL DIMENSIONS ON SITE PRIOR TO COMMENCING WORK. WRITTEN DIMENSIONS SHALL TAKE PRECEDENCE. ALL DRAWINGS TO BE READ IN CONJUNCTION WITH MANUFACTURERS AND CONSULTANTS DOCUMENTATION AND SPECIFICATION. REPORT ANY DISCREPANCIES TO LANDSCAPE ARCHITECT BEFORE PROCEEDING WITH WORK.

COPYRIGHT ©: THIS DOCUMENT MAY ONLY BE USED FOR THE PURPOSE FOR WHICH IT WAS COMMISSIONED IN ACCORDANCE WITH THE TERMS OF ENGAGEMENT.

GENUS / SPECIES	NOONGAR'/COMMON NAME	HEIGHT (m)	WIDTH/ SPACING (m)	No. OF PLANTS	TOTAL AREA (m^2)	LIN m
CORRIDOR GREENING - OPEN WOODLAND (per 100m2)						
Trees (Overlay)						
Acacia saligna	Coojong'/ Golden Wreath Wattle	to 6m	3	0.2	0.6	
Allocasuarina fraseriana	Western Sheoak	to 10m	6	0.1	0.6	
Banksia attenuata	Biara'/ Candlestick Banksia	to 10m	2	0.2	0.4	
Banksia grandis	Bull Banksia	1.5-10m	2	0.2	0.4	
Banksia menziesii	Firewood Banksia	to 7m	2	0.2	0.4	
Banksia prionotes	Acorn Banksia	to 10m	2	0.2	0.4	
Banksia sessilis	Boojak' Parrot Bush	to 5m	1.5	0.2	0.3	
Corymbia calophylla	Marri	10-40m	20	0.1	2	
Eucalyptus argutifolia	Yanchep mallee	to 4m	2	0.3	0.6	
Eucalyptus decipiens	Redheart Moit/ Limestone Marlock	to 15m	3	0.3	0.9	
Eucalyptus foecunda	Fremantle Mallee	to 5m	2	0.3	0.6	
Eucalyptus gomphocephala	Tuart	to 40m	20	0.1	2	
Eucalyptus marginata	Jarrah	10-40m	6	0.1	0.6	
Eucalyptus petrensis	Koodjat'/ Limestone Mallee	to 4m	2	0.3	0.6	
Eucalyptus todtiana	Coastal Blackbutt	2-8m	2	0.3	0.6	
TOTAL NUMBER OF PLANTS				**3.1**		
TOTAL AREA (m^2)					**11**	
Tall Shrubs - to 3m+						
Allocasuarina lehmanniana	Dune Sheoak	3-4m	1.5	2	3	
Grevillea vestita		to 3m	2	2	4	
Hakea prostrata	Harsh Hakea	1 to 3	1.5	2	3	
Hakea trifurcata	Two-leaved Hakea	1.5-3	2	2	4	
Jacksonia sternbergiana	Green Stinkwood	3	1	2	2	
Melaleuca huegelii	Chenille Honeymyrtle	3	3	2	6	
Myoporum caprarioides	Slender Myoporum	3	1.5	2	3	
Medium Shrubs - to 2m						
Acacia lasiocarpa	Panjang'	1.5	1.5	2	3	
Acacia pulchella	Pricly Moses	to 2m	0.75	4	3	
Acacia truncata	Angle leaved Wattle	1.5	1.5	2	3	
Allocasuarina humilis	Dwarf Sheoak	1.5	1.5	2	3	
Calothamnus sanguineus	Silky-leaved Blood Flower	1.5	1.5	2	3	
Calothamnus quadrifidus	One-sided Bottlebrush	2	2	2	4	
Dodonaea aptera	Coast Hopbush	2	2	2	4	
Guichenotia ledifolia		1.5	1.5	2	3	
Hakea lissocarpha	Honey Bush	1.5	1	3	3	
Logania vaginalis	White Spray	1.8	1.5	2	3	
Melaleuca systena	Coastal Honeymyrtle	1.5	1.5	2	3	
Myoporum insulare	Common Boobialla	2	2	2	4	
Rhagodia baccata	Berry Saltbush.	1.5	1.5	2	3	
Scaevola nitida	Shining Fanflower	1.5-3	1.5	2	3	
Templetonia retusa	Cockies tongue	to 2m	2	2	4	
Low Shrubs - to 1m						
Acacia alata	Winged Wattle	1	0.5	4	2	
Banksia dallanneyi/nivea	Couch Honeypot	0.1	1	4	4	
Eremophila glabra subsp. Alb.	Tar Bush	0.3	1	3	3	
Gompholobium tomentosum	Yellow Pea	0.5m	0.5	4	2	
Grevillea preissii		0.5	1	2	2	
Hibbertia subvaginata	Grey-leaved Coastal Guinea Flower	0.5	0.5	4	2	
Hypocallyma robustum	Swan River Myrtle	1	1	2	2	
Jacksonia sericea	Waldjumi'	0.6	1.5	2	3	
Phyllanthus calycinus	False Boronia	0.5	0.5	4	2	
Westringia dampieri	Coastal Rosemary	1	1	4	4	
TOTAL NUMBER OF PLANTS				**80**		
TOTAL AREA (m^2)					**100**	
TOTAL PLANTS PER 100m^2				**83.1**		

FINAL ISSUE

----	----	----
----	----	----
----	----	----
----	----	----
----	----	----
----	----	----
----	----	----
----	----	----
04/09/2019	FINAL ISSUE	B
22/08/2019	ISSUE FOR REVIEW	A
DATE	DESCRIPTION	REV

PROJECT TITLE
TOWN OF COTTESLOE
RAILWAY CORRIDOR GREENING DESIGN
COTTESLOE, WA

DRAWING TITLE
PLANT SCHEDULE

PROJECT NO.	SCALE @ A3	PLOT DATE	REVISION
1912	AS SHOWN	04/09/2019	B

FILE PATH
P:\07 PROJECTS COMMERCIAL\1912 TOC RAIL CORRIDOR GREENING\08 DRAWINGS\02 JBA\03 DETAILED DESIGN\04 SHEET SET MANAGER

DRAWN	CHECKED	APPROVED	DRAWING NO.
MC	PV	MG	DD-102

JOSH BYRNE & ASSOCIATES
LANDSCAPE • SUSTAINABILITY • COMMUNICATIONS
08 9433 3721
Suite 109, Atwell Buildings
3 Cantonment Street, Fremantle WA 6160
PO Box 1866, Fremantle WA 6959
www.joshbyrne.com.au

NOTE: CHECK ALL DIMENSIONS ON SITE PRIOR TO COMMENCING WORK. WRITTEN DIMENSIONS SHALL TAKE PRECEDENCE. ALL DRAWINGS TO BE READ IN CONJUNCTION WITH MANUFACTURERS AND CONSULTANTS DOCUMENTATION AND SPECIFICATION. REPORT ANY DISCREPANCIES TO LANDSCAPE ARCHITECT BEFORE PROCEEDING WITH WORK.

COPYRIGHT ©: THIS DOCUMENT MAY ONLY BE USED FOR THE PURPOSE FOR WHICH IT WAS COMMISSIONED IN ACCORDANCE WITH THE TERMS OF ENGAGEMENT.

GENUS / SPECIES	NOONGAR'/COMMON NAME	HEIGHT (m)	WIDTH/ SPACING (m)	No. OF PLANTS	TOTAL AREA (m²)	LIN m
CORRIDOR GREENING - HEATH (per 100m2)						
Trees						
Acacia saligna	Coojong'/ Golden Wreath Wattle	to 6m	3	0.3	0.9	
Agonis flexuosa	Wonnil'/ Peppermint Tree	to 10m	10	0.1	1	
Allocasuarina fraseriana	Western Sheoak	to 10m	6	0.2	1.2	
Banksia attenuata	Biara'/ Candlestick Banksia	to 10m	2	0.3	0.6	
Banksia grandis	Bull Banksia	1.5-10m	2	0.3	0.6	
Banksia menziesii	Firewood Banksia	to 7m	2	0.3	0.6	
Banksia prionotes	Acorn Banksia	to 10m	2	0.3	0.6	
Banksia sessilis	Boojak' Parrot Bush	to 5m	1.5	0.1	0.15	
Callitris preissii	Rottnest Island Pine	6	3	0.2	0.6	
Eucalyptus argutifolia	Yanchep mallee	to 4m	3	0.2	0.6	
Eucalyptus decipiens	Redheart Moit/ Limestone Marlock	6	3	0.2	0.6	
Eucalyptus foecunda	Fremantle Mallee	to 5m	2	0.3	0.6	
Eucalyptus petrensis	Koodjat'/ Limestone mallee	to 4m	3	0.2	0.6	
Eucalyptus todtiana	Coastal Blackbutt	2-15m	3	0.2	0.6	
Melaleuca lanceolata	Rottnest Island Teatree	to 8m	2	0.3	0.6	
TOTAL NUMBER OF PLANTS				**3.5**		
TOTAL AREA (m²)					**10**	
Tall Shrubs - to 3m+						
Acacia cochlearis	Rigid Wattle	to 3m	2	1	2	
Acacia cyclops	Coastal wattle/ Cyclops Wattle	3	3	1	3	
Acacia xanthina	White -stemmed Wattle	2- 4m	2	1	2	
Allocasuarina lehmanniana	Dune Sheoak	3-4m	1.5	2	3	
Calothamnus quadrifidus	One-sided Bottlebrush	2	2	1	2	
Dodonaea aptera	Coast Hopbush	2	2	1	2	
Grevillea vestita		to 3m	2	1	2	
Hakea prostrata	Harsh Hakea	1-3m	1.5	2	3	
Hakea trifurcata	Two-leaved Hakea	1.5-3m	2	1	2	
Leucopogon parviflorus	Coast Beard-Heath	to 3m	2	1	2	
Melaleuca huegelii	Chenille Honeymyrtle	3	2	1	2	
Myoporum insulare	Blueberry Tree	2	2	1	2	
Mid Shrubs - to 2m						
Acacia truncata	Angle leaved Wattle	1.5	1.5	2	3	
Allocasuarina humilis	Dwarf Sheoak	1.5	1.5	2	3	
Anthocercis ilicifolia		1.5	1.5	2	3	
Atriplex cinerea	Grey Salt Bush	1.5	1.5	2	3	
Atriplex isatidea	Coast Saltbush	1.5	1.5	2	3	
Logania vaginalis	White Spray	1.8	1.5	2	3	
Melaleuca cardiophylla	Tangling Melaleuca	1.5	1.5	2	3	
Melaleuca systena	Coastal Honeymyrtle	1.5	1.5	2	3	
Myoporum insulare	Common Boobialla	2	2	2	4	
Olearia axillaris	Coastal Daisy Bush	1.5	1.5	2	3	
Rhagodia baccata	Berry Saltbush.	1.5	1.5	2	3	
Scaevola crassifolia	Thick leaved Scaevola	1.5	2	2	4	
Scaevola nitida	Shining Fanflower	1.5	2	2	4	
Templetonia retusa	Cockies tongue	to 2m	2	2	4	
Low Shrubs - to 1m						
Acacia alata	Winged Wattle	1	0.5	4	2	
Acanthocarpus preissii	Prickly Lily	0.75	0.75	4	3	
Banksia dallanneyi/nivea	Couch Honeypot	0.1	1	2	2	
Eremophila glabra subsp. Alb.	Tar Bush	0.3	1	2	2	
Gompholobium tomentosum	Yellow Pea	0.5	0.5	4	2	
Hibbertia subvaginata	Grey-leaved Coastal Guinea Flower	0.5	0.5	4	2	
Hypocallyma robustum	Swan River Myrtle	1	1	2	2	
Jacksonia sericea	Waldjumi'	0.6m	1.5	2	3	
Leucophyta brownii	Cushion Bush	1	1	2	2	
Pimelea ferruginea	Coast Banjine	0.3	1	3	3	
Thomasia cognata		0.4	0.5	4	2	
Westringia dampieri	Coastal Rosemary	1	1	2	2	
TOTAL NUMBER OF PLANTS				77		
TOTAL AREA (m²)					**100**	
TOTAL PLANTS PER 100M2				**80.5**		

GENUS / SPECIES	NOONGAR'/COMMON NAME	HEIGHT (m)	WIDTH/ SPACING (m)	No. OF PLANTS	TOTAL AREA (m²)	LIN m
CORRIDOR GREENING OPTIONS - COPSE						
Trees (Plant in groups of 3, 5, or 7)						
Agonis flexuosa	Wonnil'/ Peppermint Tree	to 15m	10	5		
Allocasuarina fraseriana	Western Sheoak	to 12m	4	7		
Eucalyptus argutifolia	Yanchep mallee	to 4m	2.5	5		
Eucalyptus decipiens	Redheart Moit/ Limestone Marlock	to 15m	3	5		
Eucalyptus foecunda	Fremantle Mallee	to 5m	2.5	5		
Eucalyptus todtiana	Coastal Blackbutt	2-15m	2.5	5		
NUMBERS INCLUDED IN INDIVIDUAL MIXES						
SCREENING OPTIONS (for approx 300 linear metres)						
Trees/Tall shrubs						
Agonis flexuosa (nana)	Dwarf WA Peppermint (prunable)	1-2m	2			
Allocasuarina fraseriana	Western Sheoak	to 10m	6			
Callitris preissii	Rottnest Island Pine	6	4			
Melaleuca huegelii	Chenille Honeymyrtle (prunable)	to 4	4			
Templetonia retusa	Cockies tongue (prunable)	2	4	75		300
TOTAL NUMBER OF PLANTS				**75**		
TOTAL LINEAR METRES						**300**

Plant Schedule

All plants recommended within the plant schedule are local and endemic plants chosen with aid from the following sources:

- Apace Revegetation Catalogue - Cottesloe Vegetation Complex
- Apace Coastal Species compiled by Richard McDowell of Apace training
- Coastal Plants by Kingsley Dixon
  Dixon, Kingsley W, 2011, CSIRO Publishing, 150 Oxford St, Collingwood, Victoria Australia 3066
- Cottesloe Natural Areas Management Plan - Final 22 September 2008. Prepared by Ecoscape (Australia) Pty Ltd, 6197-1990-07R Final

All plants included in The Plant Schedule are confirmed to be currently in production by Apace, Trillion Trees or Plantrite.

General Planting recommendations

- Using 45L trees rather than 200L trees will give a better health, growth and survival rate.

General recommendations

- Remove dead trees, trim unsightly or damaged branches
- Remove significant weed species before planting
- Consider CPTED principles
  - Ensure mature trees wont obscure lighting.
  - Place mid-story planting back from paths, to remove possible hiding places close to pathways.
- Ensure vegetation placement within the road reserve complies with Main Roads Standards

https://www.mainroads.wa.gov.au/BuildingRoads/StandardsTechnical/RoadandTrafficEngineering/RoadsideItems/Pages/Revegetation-and-Landscaping.aspx

FINAL ISSUE

DATE	DESCRIPTION	REV
04/09/2019	FINAL ISSUE	B
22/08/2019	ISSUE FOR REVIEW	A
----	----	----

PROJECT TITLE
TOWN OF COTTESLOE
RAILWAY CORRIDOR GREENING DESIGN
COTTESLOE, WA

DRAWING TITLE
PLANT SCHEDULE

PROJECT NO.	SCALE @ A3	PLOT DATE	REVISION
1912	AS SHOWN	04/09/2019	B

FILE PATH
P:\07 PROJECTS COMMERCIAL\1912 TOC RAIL CORRIDOR GREENING\08 DRAWINGS\02 JBA\03 DETAILED DESIGN\04 SHEET SET MANAGER

DRAWN	CHECKED	APPROVED	DRAWING NO.
MC	PV	MG	DD-103

JOSH BYRNE & ASSOCIATES
LANDSCAPE • SUSTAINABILITY • COMMUNICATIONS
08 9433 3721
Suite 109, Atwell Buildings
3 Cantonment Street, Fremantle WA 6160
PO Box 1866, Fremantle WA 6959
www.joshbyrne.com.au

NOTE: CHECK ALL DIMENSIONS ON SITE PRIOR TO COMMENCING WORK. WRITTEN DIMENSIONS SHALL TAKE PRECEDENCE. ALL DRAWINGS TO BE READ IN CONJUNCTION WITH MANUFACTURERS AND CONSULTANTS DOCUMENTATION AND SPECIFICATION. REPORT ANY DISCREPANCIES TO LANDSCAPE ARCHITECT BEFORE PROCEEDING WITH WORK.

COPYRIGHT ©: THIS DOCUMENT MAY ONLY BE USED FOR THE PURPOSE FOR WHICH IT WAS COMMISSIONED IN ACCORDANCE WITH THE TERMS OF ENGAGEMENT.

GRANT STREET

CURTIN AVENUE

RAILWAY

HAWKSTONE STREET

506m²

129m²

139m²

259m²

510m²

842m²

REFER DD-201

0 5 10 15 20 25m

1:500

LEGEND

SOFTWORKS

- EXISTING TREES
- EXISTING VEGETATION
- PROPOSED TREES
- RETAINING MIX
- RETAINING MIX + HYD. MULCH
- SWALE MIX
- FEATURE MIX
- WOODLAND MIX
- OPEN WOODLAND MIX
- HEATH MIX
- SCREENING MIX
- TURF
- MULCH
- JUTE MATT TREATMENT
- FUTURE WORKS
- FUTURE ARTWORK LOCATION
- FUTURE REST STOP LOCATION

EXISTING SERVICES

- WATER
- SEWER
- COMS - GENERAL
- POWER - UNDERGROUND
- POWER - OVERHEAD
- POWER - PTS LOW VOLTAGE
- GAS
- DRAINAGE
- UNKNOWN

EASEMENT / RESERVE

- ROAD RESERVE

TREE ABBREVIATIONS

Eg - Eucalyptus gomphocephala (Tuart)

Cm - Eucalpytus cladocalyx nana (Dwarf Sugar Gum)

FINAL ISSUE

DATE	DESCRIPTION	REV
04/09/2019	FINAL ISSUE	B
22/08/2019	ISSUE FOR REVIEW	A
----	----	----
----	----	----
----	----	----
----	----	----
----	----	----
----	----	----
----	----	----
----	----	----
----	----	----

PROJECT TITLE

TOWN OF COTTESLOE

RAILWAY CORRIDOR GREENING DESIGN

COTTESLOE, WA

DRAWING TITLE

PLANTING PLAN

PROJECT NO.	SCALE @ A3	PLOT DATE	REVISION
1912	AS SHOWN	04/09/2019	B

FILE PATH
P:\07 PROJECTS COMMERCIAL\1912 TOC RAIL CORRIDOR GREENING\08 DRAWINGS\02 JBA\03 DETAILED DESIGN\04 SHEET SET MANAGER

DRAWN	CHECKED	APPROVED	DRAWING NO.
MC	PV	MG	DD-200

JOSH BYRNE & ASSOCIATES

LANDSCAPE • SUSTAINABILITY • COMMUNICATIONS

08 9433 3721

Suite 109, Atwell Buildings

3 Cantonment Street, Fremantle WA 6160

PO Box 1866, Fremantle WA 6959

www.joshbyrne.com.au

NOTE: CHECK ALL DIMENSIONS ON SITE PRIOR TO COMMENCING WORK. WRITTEN DIMENSIONS SHALL TAKE PRECEDENCE. ALL DRAWINGS TO BE READ IN CONJUNCTION WITH MANUFACTURERS AND CONSULTANTS DOCUMENTATION AND SPECIFICATION. REPORT ANY DISCREPANCIES TO LANDSCAPE ARCHITECT BEFORE PROCEEDING WITH WORK.

COPYRIGHT ©: THIS DOCUMENT MAY ONLY BE USED FOR THE PURPOSE FOR WHICH IT WAS COMMISSIONED IN ACCORDANCE WITH THE TERMS OF ENGAGEMENT.

REFER DD-200

FLORENCE STREET

CURTIN AVENUE

RAILWAY

ERIC STREET

366m²

125m²

52m²

70m²

434m²

293m²

158m²

Eg

339m²

164m²

Eg

146m²

204m²

REFER DD-202

0 5 10 15 20 25m

1:500

LEGEND

SOFTWORKS

- EXISTING TREES
- EXISTING VEGETATION
- PROPOSED TREES
- RETAINING MIX
- RETAINING MIX + HYD. MULCH
- SWALE MIX
- FEATURE MIX
- WOODLAND MIX
- OPEN WOODLAND MIX
- HEATH MIX
- SCREENING MIX
- TURF
- MULCH
- JUTE MATT TREATMENT
- FUTURE WORKS
- FUTURE ARTWORK LOCATION
- FUTURE REST STOP LOCATION

EXISTING SERVICES

- WATER
- SEWER
- COMS - GENERAL
- POWER - UNDERGROUND
- POWER - OVERHEAD
- POWER - PTS LOW VOLTAGE
- GAS
- DRAINAGE
- UNKNOWN

EASEMENT / RESERVE

- ROAD RESERVE

TREE ABBREVIATIONS

Eg - Eucalyptus gomphocephala (Tuart)

Cm - Eucalpytus cladocalyx nana (Dwarf Sugar Gum)

FINAL ISSUE

DATE	DESCRIPTION	REV
----	----	----
----	----	----
----	----	----
----	----	----
----	----	----
----	----	----
----	----	----
----	----	----
04/09/2019	FINAL ISSUE	B
22/08/2019	ISSUE FOR REVIEW	A

PROJECT TITLE

TOWN OF COTTESLOE

RAILWAY CORRIDOR GREENING DESIGN

COTTESLOE, WA

DRAWING TITLE

PLANTING PLAN

N

PROJECT NO.	SCALE @ A3	PLOT DATE	REVISION
1912	AS SHOWN	04/09/2019	B

FILE PATH
P:\07 PROJECTS COMMERCIAL\1912 TOC RAIL CORRIDOR GREENING\08 DRAWINGS\02 JBA\03 DETAILED DESIGN\04 SHEET SET MANAGER

DRAWN	CHECKED	APPROVED	DRAWING NO.
MC	PV	MG	DD-201

JOSH BYRNE & ASSOCIATES

LANDSCAPE • SUSTAINABILITY • COMMUNICATIONS

08 9433 3721

Suite 109, Atwell Buildings

3 Cantonment Street, Fremantle WA 6160

PO Box 1866, Fremantle WA 6959

www.joshbyrne.com.au

NOTE: CHECK ALL DIMENSIONS ON SITE PRIOR TO COMMENCING WORK. WRITTEN DIMENSIONS SHALL TAKE PRECEDENCE. ALL DRAWINGS TO BE READ IN CONJUNCTION WITH MANUFACTURERS AND CONSULTANTS DOCUMENTATION AND SPECIFICATION. REPORT ANY DISCREPANCIES TO LANDSCAPE ARCHITECT BEFORE PROCEEDING WITH WORK.

COPYRIGHT ©: THIS DOCUMENT MAY ONLY BE USED FOR THE PURPOSE FOR WHICH IT WAS COMMISSIONED IN ACCORDANCE WITH THE TERMS OF ENGAGEMENT.

REFER DD-201

CURTIN AVENUE

RAILWAY

ATHELSTAN ROAD

1705m²

770m²

521m²

REFER DD-203

0 5 10 15 20 25m

1:500

LEGEND

SOFTWORKS

- EXISTING TREES
- EXISTING VEGETATION
- PROPOSED TREES
- RETAINING MIX
- RETAINING MIX + HYD. MULCH
- SWALE MIX
- FEATURE MIX
- WOODLAND MIX
- OPEN WOODLAND MIX
- HEATH MIX
- SCREENING MIX
- TURF
- MULCH
- JUTE MATT TREATMENT
- FUTURE WORKS
- FUTURE ARTWORK LOCATION
- FUTURE REST STOP LOCATION

EXISTING SERVICES

- WATER
- SEWER
- COMS - GENERAL
- POWER - UNDERGROUND
- POWER - OVERHEAD
- POWER - PTS LOW VOLTAGE
- GAS
- DRAINAGE
- UNKNOWN

EASEMENT / RESERVE

- ROAD RESERVE

TREE ABBREVIATIONS

Eg - Eucalyptus gomphocephala (Tuart)

Cm - Eucalpytus cladocalyx nana (Dwarf Sugar Gum)

FINAL ISSUE

DATE	DESCRIPTION	REV
04/09/2019	FINAL ISSUE	B
22/08/2019	ISSUE FOR REVIEW	A

PROJECT TITLE

TOWN OF COTTESLOE

RAILWAY CORRIDOR GREENING DESIGN

COTTESLOE, WA

DRAWING TITLE

PLANTING PLAN

PROJECT NO.	SCALE @ A3	PLOT DATE	REVISION
1912	AS SHOWN	04/09/2019	B

FILE PATH
P:\07 PROJECTS COMMERCIAL\1912 TOC RAIL CORRIDOR GREENING\08 DRAWINGS\02 JBA\03 DETAILED DESIGN\04 SHEET SET MANAGER

DRAWN	CHECKED	APPROVED	DRAWING NO.
MC	PV	MG	DD-202

JOSH BYRNE & ASSOCIATES
LANDSCAPE • SUSTAINABILITY • COMMUNICATIONS

08 9433 3721
Suite 109, Atwell Buildings
3 Cantonment Street, Fremantle WA 6160
PO Box 1866, Fremantle WA 6959
www.joshbyrne.com.au

NOTE: CHECK ALL DIMENSIONS ON SITE PRIOR TO COMMENCING WORK. WRITTEN DIMENSIONS SHALL TAKE PRECEDENCE. ALL DRAWINGS TO BE READ IN CONJUNCTION WITH MANUFACTURERS AND CONSULTANTS DOCUMENTATION AND SPECIFICATION. REPORT ANY DISCREPANCIES TO LANDSCAPE ARCHITECT BEFORE PROCEEDING WITH WORK.

COPYRIGHT ©: THIS DOCUMENT MAY ONLY BE USED FOR THE PURPOSE FOR WHICH IT WAS COMMISSIONED IN ACCORDANCE WITH THE TERMS OF ENGAGEMENT.

REFER DD-202

683m²

146m²

272m²

268m²

312m²

147m²

108m²

228m²

1199m²

CURTIN AVENUE

RAILWAY

NAPIER STREET

REFER DD-204

0 5 10 15 20 25m

1:500

LEGEND

SOFTWORKS

- EXISTING TREES
- EXISTING VEGETATION
- PROPOSED TREES
- RETAINING MIX
- RETAINING MIX + HYD. MULCH
- SWALE MIX
- FEATURE MIX
- WOODLAND MIX
- OPEN WOODLAND MIX
- HEATH MIX
- SCREENING MIX
- TURF
- MULCH
- JUTE MATT TREATMENT
- FUTURE WORKS
- FUTURE ARTWORK LOCATION
- FUTURE REST STOP LOCATION

EXISTING SERVICES

- WATER
- SEWER
- COMS - GENERAL
- POWER - UNDERGROUND
- POWER - OVERHEAD
- POWER - PTS LOW VOLTAGE
- GAS
- DRAINAGE
- UNKNOWN

EASEMENT / RESERVE

- ROAD RESERVE

TREE ABBREVIATIONS

Eg - Eucalyptus gomphocephala (Tuart)

Cm - Eucalpytus cladocalyx nana (Dwarf Sugar Gum)

FINAL ISSUE

DATE	DESCRIPTION	REV
----	----	----
----	----	----
----	----	----
----	----	----
----	----	----
----	----	----
----	----	----
----	----	----
04/09/2019	FINAL ISSUE	B
22/08/2019	ISSUE FOR REVIEW	A

PROJECT TITLE

TOWN OF COTTESLOE

RAILWAY CORRIDOR GREENING DESIGN

COTTESLOE, WA

DRAWING TITLE

PLANTING PLAN

PROJECT NO.	SCALE @ A3	PLOT DATE	REVISION
1912	AS SHOWN	04/09/2019	B

FILE PATH
P:\07 PROJECTS COMMERCIAL\1912 TOC RAIL CORRIDOR GREENING\08 DRAWINGS\02 JBA\03 DETAILED DESIGN\04 SHEET SET MANAGER

DRAWN	CHECKED	APPROVED	DRAWING NO.
MC	PV	MG	DD-203

JOSH BYRNE & ASSOCIATES

LANDSCAPE • SUSTAINABILITY • COMMUNICATIONS

08 9433 3721

Suite 109, Atwell Buildings

3 Cantonment Street, Fremantle WA 6160

PO Box 1866, Fremantle WA 6959

www.joshbyrne.com.au

NOTE: CHECK ALL DIMENSIONS ON SITE PRIOR TO COMMENCING WORK. WRITTEN DIMENSIONS SHALL TAKE PRECEDENCE. ALL DRAWINGS TO BE READ IN CONJUNCTION WITH MANUFACTURERS AND CONSULTANTS DOCUMENTATION AND SPECIFICATION. REPORT ANY DISCREPANCIES TO LANDSCAPE ARCHITECT BEFORE PROCEEDING WITH WORK.

COPYRIGHT ©: THIS DOCUMENT MAY ONLY BE USED FOR THE PURPOSE FOR WHICH IT WAS COMMISSIONED IN ACCORDANCE WITH THE TERMS OF ENGAGEMENT.

REFER DD-203

339m²

162m²

E

Eg

787m²

CURTIN AVENUE

RAILWAY

102m²

F

757m²

856m²

BIRD STREET

690m²

695m²

G

REFER DD-205

0 5 10 15 20 25m

1:500

LEGEND

SOFTWORKS

- EXISTING TREES
- EXISTING VEGETATION
- PROPOSED TREES
- RETAINING MIX
- RETAINING MIX + HYD. MULCH
- SWALE MIX
- FEATURE MIX
- WOODLAND MIX
- OPEN WOODLAND MIX
- HEATH MIX
- SCREENING MIX
- TURF
- MULCH
- JUTE MATT TREATMENT
- FUTURE WORKS
- FUTURE ARTWORK LOCATION
- FUTURE REST STOP LOCATION

EXISTING SERVICES

- WATER
- SEWER
- COMS - GENERAL
- POWER - UNDERGROUND
- POWER - OVERHEAD
- POWER - PTS LOW VOLTAGE
- GAS
- DRAINAGE
- UNKNOWN

EASEMENT / RESERVE

- ROAD RESERVE

TREE ABBREVIATIONS

Eg - Eucalyptus gomphocephala (Tuart)

Cm - Eucalpytus cladocalyx nana (Dwarf Sugar Gum)

FINAL ISSUE

DATE	DESCRIPTION	REV
04/09/2019	FINAL ISSUE	B
22/08/2019	ISSUE FOR REVIEW	A

PROJECT TITLE

TOWN OF COTTESLOE

RAILWAY CORRIDOR GREENING DESIGN

COTTESLOE, WA

DRAWING TITLE

PLANTING PLAN

PROJECT NO.	SCALE @ A3	PLOT DATE	REVISION
1912	AS SHOWN	04/09/2019	B

FILE PATH
P:\07 PROJECTS COMMERCIAL\1912 TOC RAIL CORRIDOR GREENING\08 DRAWINGS\02 JBA\03 DETAILED DESIGN\04 SHEET SET MANAGER

DRAWN	CHECKED	APPROVED	DRAWING NO.
MC	PV	MG	DD-204

JOSH BYRNE & ASSOCIATES

LANDSCAPE • SUSTAINABILITY • COMMUNICATIONS

08 9433 3721

Suite 109, Atwell Buildings

3 Cantonment Street, Fremantle WA 6160

PO Box 1866, Fremantle WA 6959

www.joshbyrne.com.au

NOTE: CHECK ALL DIMENSIONS ON SITE PRIOR TO COMMENCING WORK. WRITTEN DIMENSIONS SHALL TAKE PRECEDENCE. ALL DRAWINGS TO BE READ IN CONJUNCTION WITH MANUFACTURERS AND CONSULTANTS DOCUMENTATION AND SPECIFICATION. REPORT ANY DISCREPANCIES TO LANDSCAPE ARCHITECT BEFORE PROCEEDING WITH WORK.

COPYRIGHT ©: THIS DOCUMENT MAY ONLY BE USED FOR THE PURPOSE FOR WHICH IT WAS COMMISSIONED IN ACCORDANCE WITH THE TERMS OF ENGAGEMENT.

REFER DD-204

CURTIN AVENUE

RAILWAY

271m²

2952m²

2272m²

561m²

199m²

498m²

157m²

235m²

264m²

482m²

1192m²

1017m²

378m²

947m²

1160m²

185m²

Ec
Eg

SEATING AREA

PUMP TRACK

REFER DD-206

0 5 10 15 20 25m

1:500

LEGEND

SOFTWORKS

- EXISTING TREES
- EXISTING VEGETATION
- PROPOSED TREES
- RETAINING MIX
- RETAINING MIX + HYD. MULCH
- SWALE MIX
- FEATURE MIX
- WOODLAND MIX
- OPEN WOODLAND MIX
- HEATH MIX
- SCREENING MIX
- TURF
- MULCH
- JUTE MATT TREATMENT
- FUTURE WORKS
- FUTURE ARTWORK LOCATION
- FUTURE REST STOP LOCATION

EXISTING SERVICES

- WATER
- SEWER
- COMS - GENERAL
- POWER - UNDERGROUND
- POWER - OVERHEAD
- POWER - PTS LOW VOLTAGE
- GAS
- DRAINAGE
- UNKNOWN

EASEMENT / RESERVE

- ROAD RESERVE

TREE ABBREVIATIONS

Eg - Eucalyptus gomphocephala (Tuart)

Cm - Eucalpytus cladocalyx nana (Dwarf Sugar Gum)

FINAL ISSUE

DATE	DESCRIPTION	REV
---	---	---
---	---	---
---	---	---
---	---	---
---	---	---
---	---	---
---	---	---
---	---	---
04/09/2019	FINAL ISSUE	B
22/08/2019	ISSUE FOR REVIEW	A

PROJECT TITLE

TOWN OF COTTESLOE

RAILWAY CORRIDOR GREENING DESIGN

COTTESLOE, WA

DRAWING TITLE

PLANTING PLAN

PROJECT NO.	SCALE @ A3	PLOT DATE	REVISION
1912	AS SHOWN	04/09/2019	B

FILE PATH
P:\07 PROJECTS COMMERCIAL\1912 TOC RAIL CORRIDOR GREENING\08 DRAWINGS\02 JBA\03 DETAILED DESIGN\04 SHEET SET MANAGER

DRAWN	CHECKED	APPROVED	DRAWING NO.
MC	PV	MG	DD-205

JOSH BYRNE & ASSOCIATES
LANDSCAPE • SUSTAINABILITY • COMMUNICATIONS

08 9433 3721
Suite 109, Atwell Buildings
3 Cantonment Street, Fremantle WA 6160
PO Box 1866, Fremantle WA 6959
www.joshbyrne.com.au

NOTE: CHECK ALL DIMENSIONS ON SITE PRIOR TO COMMENCING WORK. WRITTEN DIMENSIONS SHALL TAKE PRECEDENCE. ALL DRAWINGS TO BE READ IN CONJUNCTION WITH MANUFACTURERS AND CONSULTANTS DOCUMENTATION AND SPECIFICATION. REPORT ANY DISCREPANCIES TO LANDSCAPE ARCHITECT BEFORE PROCEEDING WITH WORK.

COPYRIGHT ©: THIS DOCUMENT MAY ONLY BE USED FOR THE PURPOSE FOR WHICH IT WAS COMMISSIONED IN ACCORDANCE WITH THE TERMS OF ENGAGEMENT.

REFER DD-205

156m²
Eg
904m²
69m²
Eg
131m²
531m²
650m²
910m²
D4
FINEY STREET
RAILWAY
PTA U/G
CURTIN AVENUE
POWER STATION
1260m²
D5
D6
REFER DD-207

0 5 10 15 20 25m
1:500

LEGEND

SOFTWORKS

- EXISTING TREES
- EXISTING VEGETATION
- PROPOSED TREES
- RETAINING MIX
- RETAINING MIX + HYD. MULCH
- SWALE MIX
- FEATURE MIX
- WOODLAND MIX
- OPEN WOODLAND MIX
- HEATH MIX
- SCREENING MIX
- TURF
- MULCH
- JUTE MATT TREATMENT
- FUTURE WORKS
- FUTURE ARTWORK LOCATION
- FUTURE REST STOP LOCATION

EXISTING SERVICES

- WATER
- SEWER
- COMS - GENERAL
- POWER - UNDERGROUND
- POWER - OVERHEAD
- POWER - PTS LOW VOLTAGE
- GAS
- DRAINAGE
- UNKNOWN

EASEMENT / RESERVE

- ROAD RESERVE

TREE ABBREVIATIONS

Eg - Eucalyptus gomphocephala (Tuart)
Cm - Eucalpytus cladocalyx nana (Dwarf Sugar Gum)

FINAL ISSUE

---	---	---
---	---	---
---	---	---
---	---	---
---	---	---
---	---	---
---	---	---
---	---	---
04/09/2019	FINAL ISSUE	B
22/08/2019	ISSUE FOR REVIEW	A
DATE	DESCRIPTION	REV

PROJECT TITLE
TOWN OF COTTESLOE
RAILWAY CORRIDOR GREENING DESIGN
COTTESLOE, WA

DRAWING TITLE
PLANTING PLAN

PROJECT NO.	SCALE @ A3	PLOT DATE	REVISION
1912	AS SHOWN	04/09/2019	B

FILE PATH
P:\07 PROJECTS COMMERCIAL\1912 TOC RAIL CORRIDOR GREENING\08 DRAWINGS\02 JBA\03 DETAILED DESIGN\04 SHEET SET MANAGER

DRAWN	CHECKED	APPROVED	DRAWING NO.
MC	PV	MG	DD-206

JOSH BYRNE & ASSOCIATES
LANDSCAPE • SUSTAINABILITY • COMMUNICATIONS
08 9433 3721
Suite 109, Atwell Buildings
3 Cantonment Street, Fremantle WA 6160
PO Box 1866, Fremantle WA 6959
www.joshbyrne.com.au

NOTE: CHECK ALL DIMENSIONS ON SITE PRIOR TO COMMENCING WORK. WRITTEN DIMENSIONS SHALL TAKE PRECEDENCE. ALL DRAWINGS TO BE READ IN CONJUNCTION WITH MANUFACTURERS AND CONSULTANTS DOCUMENTATION AND SPECIFICATION. REPORT ANY DISCREPANCIES TO LANDSCAPE ARCHITECT BEFORE PROCEEDING WITH WORK.

COPYRIGHT ©: THIS DOCUMENT MAY ONLY BE USED FOR THE PURPOSE FOR WHICH IT WAS COMMISSIONED IN ACCORDANCE WITH THE TERMS OF ENGAGEMENT.

REFER DD-206

37m²
296m²
JARRAD STREET
201m²
11m²
126m²
191m²
Eg
260m²
377m²
Eg
161m²
Eg
98m²
1452m²
RAILWAY
1697m²
CURTIN AVENUE
ROSSER STREET
691m²

REFER DD-208

0 5 10 15 20 25m
1:500

LEGEND

SOFTWORKS

- EXISTING TREES
- EXISTING VEGETATION
- PROPOSED TREES
- RETAINING MIX
- RETAINING MIX + HYD. MULCH
- SWALE MIX
- FEATURE MIX
- WOODLAND MIX
- OPEN WOODLAND MIX
- HEATH MIX
- SCREENING MIX
- TURF
- MULCH
- JUTE MATT TREATMENT
- FUTURE WORKS
- FUTURE ARTWORK LOCATION
- FUTURE REST STOP LOCATION

EXISTING SERVICES

- WATER
- SEWER
- COMS - GENERAL
- POWER - UNDERGROUND
- POWER - OVERHEAD
- POWER - PTS LOW VOLTAGE
- GAS
- DRAINAGE
- UNKNOWN

EASEMENT / RESERVE

- ROAD RESERVE

TREE ABBREVIATIONS

Eg - Eucalyptus gomphocephala (Tuart)
Cm - Eucalpytus cladocalyx nana (Dwarf Sugar Gum)

FINAL ISSUE

----	----	----
----	----	----
----	----	----
----	----	----
----	----	----
----	----	----
----	----	----
----	----	----
04/09/2019	FINAL ISSUE	B
22/08/2019	ISSUE FOR REVIEW	A
DATE	DESCRIPTION	REV

PROJECT TITLE
TOWN OF COTTESLOE
RAILWAY CORRIDOR GREENING DESIGN
COTTESLOE, WA

DRAWING TITLE
PLANTING PLAN

N

PROJECT NO.	SCALE @ A3	PLOT DATE	REVISION
1912	AS SHOWN	04/09/2019	B

FILE PATH
P:\07 PROJECTS COMMERCIAL\1912 TOC RAIL CORRIDOR GREENING\08 DRAWINGS\02 JBA\03 DETAILED DESIGN\04 SHEET SET MANAGER

DRAWN	CHECKED	APPROVED	DRAWING NO.
MC	PV	MG	DD-207

JOSH BYRNE & ASSOCIATES
LANDSCAPE • SUSTAINABILITY • COMMUNICATIONS
08 9433 3721
Suite 109, Atwell Buildings
3 Cantonment Street, Fremantle WA 6160
PO Box 1866, Fremantle WA 6959
www.joshbyrne.com.au

NOTE: CHECK ALL DIMENSIONS ON SITE PRIOR TO COMMENCING WORK. WRITTEN DIMENSIONS SHALL TAKE PRECEDENCE. ALL DRAWINGS TO BE READ IN CONJUNCTION WITH MANUFACTURERS AND CONSULTANTS DOCUMENTATION AND SPECIFICATION. REPORT ANY DISCREPANCIES TO LANDSCAPE ARCHITECT BEFORE PROCEEDING WITH WORK.

COPYRIGHT ©: THIS DOCUMENT MAY ONLY BE USED FOR THE PURPOSE FOR WHICH IT WAS COMMISSIONED IN ACCORDANCE WITH THE TERMS OF ENGAGEMENT.

REFER DD-207

COTTESLOE POLICE STATION

WEBB STREET

CURTIN AVENUE

RAILWAY

PEARSE STREET

101m²

2463m²

45m²

REFER DD-209

0 5 10 15 20 25m

1:500

LEGEND

SOFTWORKS

- EXISTING TREES
- EXISTING VEGETATION
- PROPOSED TREES
- RETAINING MIX
- RETAINING MIX + HYD. MULCH
- SWALE MIX
- FEATURE MIX
- WOODLAND MIX
- OPEN WOODLAND MIX
- HEATH MIX
- SCREENING MIX
- TURF
- MULCH
- JUTE MATT TREATMENT
- FUTURE WORKS
- FUTURE ARTWORK LOCATION
- FUTURE REST STOP LOCATION

EXISTING SERVICES

- WATER
- SEWER
- COMS - GENERAL
- POWER - UNDERGROUND
- POWER - OVERHEAD
- POWER - PTS LOW VOLTAGE
- GAS
- DRAINAGE
- UNKNOWN

EASEMENT / RESERVE

- ROAD RESERVE

TREE ABBREVIATIONS

Eg - Eucalyptus gomphocephala (Tuart)

Cm - Eucalpytus cladocalyx nana (Dwarf Sugar Gum)

FINAL ISSUE

DATE	DESCRIPTION	REV
----	----	----
----	----	----
----	----	----
----	----	----
----	----	----
----	----	----
----	----	----
----	----	----
04/09/2019	FINAL ISSUE	B
22/08/2019	ISSUE FOR REVIEW	A

PROJECT TITLE

TOWN OF COTTESLOE

RAILWAY CORRIDOR GREENING DESIGN

COTTESLOE, WA

DRAWING TITLE

PLANTING PLAN

N

PROJECT NO.	SCALE @ A3	PLOT DATE	REVISION
1912	AS SHOWN	04/09/2019	B

FILE PATH
P:\07 PROJECTS COMMERCIAL\1912 TOC RAIL CORRIDOR GREENING\08 DRAWINGS\02 JBA\03 DETAILED DESIGN\04 SHEET SET MANAGER

DRAWN	CHECKED	APPROVED	DRAWING NO.
MC	PV	MG	DD-208

JOSH BYRNE & ASSOCIATES

LANDSCAPE • SUSTAINABILITY • COMMUNICATIONS

08 9433 3721

Suite 109, Atwell Buildings

3 Cantonment Street, Fremantle WA 6160

PO Box 1866, Fremantle WA 6959

www.joshbyrne.com.au

NOTE: CHECK ALL DIMENSIONS ON SITE PRIOR TO COMMENCING WORK. WRITTEN DIMENSIONS SHALL TAKE PRECEDENCE. ALL DRAWINGS TO BE READ IN CONJUNCTION WITH MANUFACTURERS AND CONSULTANTS DOCUMENTATION AND SPECIFICATION. REPORT ANY DISCREPANCIES TO LANDSCAPE ARCHITECT BEFORE PROCEEDING WITH WORK.

COPYRIGHT ©: THIS DOCUMENT MAY ONLY BE USED FOR THE PURPOSE FOR WHICH IT WAS COMMISSIONED IN ACCORDANCE WITH THE TERMS OF ENGAGEMENT.

REFER DD-208

LILLIAN STREET

CURTIN AVENUE

REGINALD STREET

RAILWAY

48m²

1378m²

1808m²

309m²

REFER DD-210

0 5 10 15 20 25m

1:500

LEGEND

SOFTWORKS

- EXISTING TREES
- EXISTING VEGETATION
- PROPOSED TREES
- RETAINING MIX
- RETAINING MIX + HYD. MULCH
- SWALE MIX
- FEATURE MIX
- WOODLAND MIX
- OPEN WOODLAND MIX
- HEATH MIX
- SCREENING MIX
- TURF
- MULCH
- JUTE MATT TREATMENT
- FUTURE WORKS
- FUTURE ARTWORK LOCATION
- FUTURE REST STOP LOCATION

EXISTING SERVICES

- WATER
- SEWER
- COMS - GENERAL
- POWER - UNDERGROUND
- POWER - OVERHEAD
- POWER - PTS LOW VOLTAGE
- GAS
- DRAINAGE
- UNKNOWN

EASEMENT / RESERVE

- ROAD RESERVE

TREE ABBREVIATIONS

Eg - Eucalyptus gomphocephala (Tuart)

Cm - Eucalpytus cladocalyx nana (Dwarf Sugar Gum)

FINAL ISSUE

DATE	DESCRIPTION	REV
----	----	----
----	----	----
----	----	----
----	----	----
----	----	----
----	----	----
----	----	----
----	----	----
----	----	----
04/09/2019	FINAL ISSUE	B
22.08.2019	ISSUE FOR REVIEW	A

PROJECT TITLE

TOWN OF COTTESLOE

RAILWAY CORRIDOR GREENING DESIGN

COTTESLOE, WA

DRAWING TITLE

PLANTING PLAN

PROJECT NO.	SCALE @ A3	PLOT DATE	REVISION
1912	AS SHOWN	04/09/2019	B

FILE PATH
P:\07 PROJECTS COMMERCIAL\1912 TOC RAIL CORRIDOR GREENING\08 DRAWINGS\02 JBA\03 DETAILED DESIGN\04 SHEET SET MANAGER

DRAWN	CHECKED	APPROVED	DRAWING NO.
MC	PV	MG	DD-209

JOSH BYRNE & ASSOCIATES
LANDSCAPE • SUSTAINABILITY • COMMUNICATIONS

08 9433 3721
Suite 109, Atwell Buildings
3 Cantonment Street, Fremantle WA 6160
PO Box 1866, Fremantle WA 6959
www.joshbyrne.com.au

NOTE: CHECK ALL DIMENSIONS ON SITE PRIOR TO COMMENCING WORK. WRITTEN DIMENSIONS SHALL TAKE PRECEDENCE. ALL DRAWINGS TO BE READ IN CONJUNCTION WITH MANUFACTURERS AND CONSULTANTS DOCUMENTATION AND SPECIFICATION. REPORT ANY DISCREPANCIES TO LANDSCAPE ARCHITECT BEFORE PROCEEDING WITH WORK.

COPYRIGHT ©: THIS DOCUMENT MAY ONLY BE USED FOR THE PURPOSE FOR WHICH IT WAS COMMISSIONED IN ACCORDANCE WITH THE TERMS OF ENGAGEMENT.

REFER DD-209

CURTIN AVENUE

RAILWAY

SALVADO STREET

904m²

438m²

73m²

89m²

58m²

114m²

490m²

REFER DD-211

0 5 10 15 20 25m

1:500

LEGEND

SOFTWORKS

- EXISTING TREES
- EXISTING VEGETATION
- PROPOSED TREES
- RETAINING MIX
- RETAINING MIX + HYD. MULCH
- SWALE MIX
- FEATURE MIX
- WOODLAND MIX
- OPEN WOODLAND MIX
- HEATH MIX
- SCREENING MIX
- TURF
- MULCH
- JUTE MATT TREATMENT
- FUTURE WORKS
- FUTURE ARTWORK LOCATION
- FUTURE REST STOP LOCATION

EXISTING SERVICES

- WATER
- SEWER
- COMS - GENERAL
- POWER - UNDERGROUND
- POWER - OVERHEAD
- POWER - PTS LOW VOLTAGE
- GAS
- DRAINAGE
- UNKNOWN

EASEMENT / RESERVE

- ROAD RESERVE

TREE ABBREVIATIONS

Eg - Eucalyptus gomphocephala (Tuart)

Cm - Eucalpytus cladocalyx nana (Dwarf Sugar Gum)

FINAL ISSUE

DATE	DESCRIPTION	REV
----	----	----
----	----	----
----	----	----
----	----	----
----	----	----
----	----	----
----	----	----
----	----	----
----	----	----
04/09/2019	FINAL ISSUE	B
22/08/2019	ISSUE FOR REVIEW	A

PROJECT TITLE

TOWN OF COTTESLOE

RAILWAY CORRIDOR GREENING DESIGN

COTTESLOE, WA

DRAWING TITLE

PLANTING PLAN

PROJECT NO.	SCALE @ A3	PLOT DATE	REVISION
1912	AS SHOWN	04/09/2019	B

FILE PATH
P:\07 PROJECTS COMMERCIAL\1912 TOC RAIL CORRIDOR GREENING\08 DRAWINGS\02 JBA\03 DETAILED DESIGN\04 SHEET SET MANAGER

DRAWN	CHECKED	APPROVED	DRAWING NO.
MC	PV	MG	DD-210

JOSH BYRNE & ASSOCIATES
LANDSCAPE • SUSTAINABILITY • COMMUNICATIONS

08 9433 3721
Suite 109, Atwell Buildings
3 Cantonment Street, Fremantle WA 6160
PO Box 1866, Fremantle WA 6959
www.joshbyrne.com.au

NOTE: CHECK ALL DIMENSIONS ON SITE PRIOR TO COMMENCING WORK. WRITTEN DIMENSIONS SHALL TAKE PRECEDENCE. ALL DRAWINGS TO BE READ IN CONJUNCTION WITH MANUFACTURERS AND CONSULTANTS DOCUMENTATION AND SPECIFICATION. REPORT ANY DISCREPANCIES TO LANDSCAPE ARCHITECT BEFORE PROCEEDING WITH WORK.

COPYRIGHT ©: THIS DOCUMENT MAY ONLY BE USED FOR THE PURPOSE FOR WHICH IT WAS COMMISSIONED IN ACCORDANCE WITH THE TERMS OF ENGAGEMENT.

REFER DD-210

114m²

490m²

780m²

CURTIN AVENUE

RAILWAY

115m²

920m²

PRINCESS STREET

323m²

REFER DD-212

0 5 10 15 20 25m

1:500

LEGEND

SOFTWORKS

- EXISTING TREES
- EXISTING VEGETATION
- PROPOSED TREES
- RETAINING MIX
- RETAINING MIX + HYD. MULCH
- SWALE MIX
- FEATURE MIX
- WOODLAND MIX
- OPEN WOODLAND MIX
- HEATH MIX
- SCREENING MIX
- TURF
- MULCH
- JUTE MATT TREATMENT
- FUTURE WORKS
- FUTURE ARTWORK LOCATION
- FUTURE REST STOP LOCATION

EXISTING SERVICES

- WATER
- SEWER
- COMS - GENERAL
- POWER - UNDERGROUND
- POWER - OVERHEAD
- POWER - PTS LOW VOLTAGE
- GAS
- DRAINAGE
- UNKNOWN

EASEMENT / RESERVE

- ROAD RESERVE

TREE ABBREVIATIONS

Eg - Eucalyptus gomphocephala (Tuart)

Cm - Eucalpytus cladocalyx nana (Dwarf Sugar Gum)

FINAL ISSUE

DATE	DESCRIPTION	REV
----	----	----
----	----	----
----	----	----
----	----	----
----	----	----
----	----	----
----	----	----
----	----	----
04/09/2019	FINAL ISSUE	B
22/08/2019	ISSUE FOR REVIEW	A

PROJECT TITLE

TOWN OF COTTESLOE

RAILWAY CORRIDOR GREENING DESIGN

COTTESLOE, WA

DRAWING TITLE

PLANTING PLAN

PROJECT NO.	SCALE @ A3	PLOT DATE	REVISION
1912	AS SHOWN	04/09/2019	B

FILE PATH
P:\07 PROJECTS COMMERCIAL\1912 TOC RAIL CORRIDOR GREENING\08 DRAWINGS\02 JBA\03 DETAILED DESIGN\04 SHEET SET MANAGER

DRAWN	CHECKED	APPROVED	DRAWING NO.
MC	PV	MG	DD-211

JOSH BYRNE & ASSOCIATES
LANDSCAPE • SUSTAINABILITY • COMMUNICATIONS

08 9433 3721
Suite 109, Atwell Buildings
3 Cantonment Street, Fremantle WA 6160
PO Box 1866, Fremantle WA 6959
www.joshbyrne.com.au

NOTE: CHECK ALL DIMENSIONS ON SITE PRIOR TO COMMENCING WORK. WRITTEN DIMENSIONS SHALL TAKE PRECEDENCE. ALL DRAWINGS TO BE READ IN CONJUNCTION WITH MANUFACTURERS AND CONSULTANTS DOCUMENTATION AND SPECIFICATION. REPORT ANY DISCREPANCIES TO LANDSCAPE ARCHITECT BEFORE PROCEEDING WITH WORK.

COPYRIGHT ©: THIS DOCUMENT MAY ONLY BE USED FOR THE PURPOSE FOR WHICH IT WAS COMMISSIONED IN ACCORDANCE WITH THE TERMS OF ENGAGEMENT.

REFER DD-211

103

10

9511

42

7

41

40

BROOME STREET

CURTIN AVENUE

RAILWAY

MOSMAN PARK TRAIN STATION

REFER DD-213

0 5 10 15 20 25m

1:500

LEGEND

SOFTWORKS

- EXISTING TREES
- EXISTING VEGETATION
- PROPOSED TREES
- RETAINING MIX
- RETAINING MIX + HYD. MULCH
- SWALE MIX
- FEATURE MIX
- WOODLAND MIX
- OPEN WOODLAND MIX
- HEATH MIX
- SCREENING MIX
- TURF
- MULCH
- JUTE MATT TREATMENT
- FUTURE WORKS
- FUTURE ARTWORK LOCATION
- FUTURE REST STOP LOCATION

EXISTING SERVICES

- WATER
- SEWER
- COMS - GENERAL
- POWER - UNDERGROUND
- POWER - OVERHEAD
- POWER - PTS LOW VOLTAGE
- GAS
- DRAINAGE
- UNKNOWN

EASEMENT / RESERVE

- ROAD RESERVE

TREE ABBREVIATIONS

Eg - Eucalyptus gomphocephala (Tuart)

Cm - Eucalpytus cladocalyx nana (Dwarf Sugar Gum)

FINAL ISSUE

DATE	DESCRIPTION	REV
04/09/2019	FINAL ISSUE	B
22/08/2019	ISSUE FOR REVIEW	A
----	----	----
----	----	----
----	----	----
----	----	----
----	----	----
----	----	----
----	----	----
----	----	----
----	----	----

PROJECT TITLE

TOWN OF COTTESLOE

RAILWAY CORRIDOR GREENING DESIGN

COTTESLOE, WA

DRAWING TITLE

PLANTING PLAN

N

PROJECT NO.	SCALE @ A3	PLOT DATE	REVISION
1912	AS SHOWN	04/09/2019	B

FILE PATH
P:\07 PROJECTS COMMERCIAL\1912 TOC RAIL CORRIDOR GREENING\08 DRAWINGS\02 JBA\03 DETAILED DESIGN\04 SHEET SET MANAGER

DRAWN	CHECKED	APPROVED	DRAWING NO.
MC	PV	MG	DD-212

JOSH BYRNE & ASSOCIATES

LANDSCAPE • SUSTAINABILITY • COMMUNICATIONS

08 9433 3721

Suite 109, Atwell Buildings

3 Cantonment Street, Fremantle WA 6160

PO Box 1866, Fremantle WA 6959

www.joshbyrne.com.au

NOTE: CHECK ALL DIMENSIONS ON SITE PRIOR TO COMMENCING WORK. WRITTEN DIMENSIONS SHALL TAKE PRECEDENCE. ALL DRAWINGS TO BE READ IN CONJUNCTION WITH MANUFACTURERS AND CONSULTANTS DOCUMENTATION AND SPECIFICATION. REPORT ANY DISCREPANCIES TO LANDSCAPE ARCHITECT BEFORE PROCEEDING WITH WORK.

COPYRIGHT ©: THIS DOCUMENT MAY ONLY BE USED FOR THE PURPOSE FOR WHICH IT WAS COMMISSIONED IN ACCORDANCE WITH THE TERMS OF ENGAGEMENT.

REFER DD-212

CURTIN AVENUE

RAILWAY

WARTON STREET

588m²

REFER DD-214

0 5 10 15 20 25m

1:500

LEGEND

SOFTWORKS

- EXISTING TREES
- EXISTING VEGETATION
- PROPOSED TREES
- RETAINING MIX
- RETAINING MIX + HYD. MULCH
- SWALE MIX
- FEATURE MIX
- WOODLAND MIX
- OPEN WOODLAND MIX
- HEATH MIX
- SCREENING MIX
- TURF
- MULCH
- JUTE MATT TREATMENT
- FUTURE WORKS
- FUTURE ARTWORK LOCATION
- FUTURE REST STOP LOCATION

EXISTING SERVICES

- WATER
- SEWER
- COMS - GENERAL
- POWER - UNDERGROUND
- POWER - OVERHEAD
- POWER - PTS LOW VOLTAGE
- GAS
- DRAINAGE
- UNKNOWN

EASEMENT / RESERVE

- ROAD RESERVE

TREE ABBREVIATIONS

Eg - Eucalyptus gomphocephala (Tuart)

Cm - Eucalpytus cladocalyx nana (Dwarf Sugar Gum)

FINAL ISSUE

DATE	DESCRIPTION	REV
04/09/2019	FINAL ISSUE	B
22/08/2019	ISSUE FOR REVIEW	A

PROJECT TITLE

TOWN OF COTTESLOE

RAILWAY CORRIDOR GREENING DESIGN

COTTESLOE, WA

DRAWING TITLE

PLANTING PLAN

PROJECT NO.	SCALE @ A3	PLOT DATE	REVISION
1912	AS SHOWN	04/09/2019	B

FILE PATH
P:\07 PROJECTS COMMERCIAL\1912 TOC RAIL CORRIDOR GREENING\08 DRAWINGS\02 JBA\03 DETAILED DESIGN\04 SHEET SET MANAGER

DRAWN	CHECKED	APPROVED	DRAWING NO.
MC	PV	MG	DD-213

JOSH BYRNE & ASSOCIATES

LANDSCAPE • SUSTAINABILITY • COMMUNICATIONS

08 9433 3721

Suite 109, Atwell Buildings

3 Cantonment Street, Fremantle WA 6160

PO Box 1866, Fremantle WA 6959

www.joshbyrne.com.au

NOTE: CHECK ALL DIMENSIONS ON SITE PRIOR TO COMMENCING WORK. WRITTEN DIMENSIONS SHALL TAKE PRECEDENCE. ALL DRAWINGS TO BE READ IN CONJUNCTION WITH MANUFACTURERS AND CONSULTANTS DOCUMENTATION AND SPECIFICATION. REPORT ANY DISCREPANCIES TO LANDSCAPE ARCHITECT BEFORE PROCEEDING WITH WORK.

COPYRIGHT ©: THIS DOCUMENT MAY ONLY BE USED FOR THE PURPOSE FOR WHICH IT WAS COMMISSIONED IN ACCORDANCE WITH THE TERMS OF ENGAGEMENT.

REFER DD-213

825m²

239m²

134m²

23m²

101m²

239m²

571m²

VICTORIA STREET

CURTIN AVENUE

RAILWAY

0 5 10 15 20 25m

1:500

LEGEND

SOFTWORKS

- EXISTING TREES
- EXISTING VEGETATION
- PROPOSED TREES
- RETAINING MIX
- RETAINING MIX + HYD. MULCH
- SWALE MIX
- FEATURE MIX
- WOODLAND MIX
- OPEN WOODLAND MIX
- HEATH MIX
- SCREENING MIX
- TURF
- MULCH
- JUTE MATT TREATMENT
- FUTURE WORKS
- FUTURE ARTWORK LOCATION
- FUTURE REST STOP LOCATION

EXISTING SERVICES

- WATER
- SEWER
- COMS - GENERAL
- POWER - UNDERGROUND
- POWER - OVERHEAD
- POWER - PTS LOW VOLTAGE
- GAS
- DRAINAGE
- UNKNOWN

EASEMENT / RESERVE

- ROAD RESERVE

TREE ABBREVIATIONS

Eg - Eucalyptus gomphocephala (Tuart)

Cm - Eucalpytus cladocalyx nana (Dwarf Sugar Gum)

FINAL ISSUE

DATE	DESCRIPTION	REV
----	----	----
----	----	----
----	----	----
----	----	----
----	----	----
----	----	----
----	----	----
----	----	----
04/09/2019	FINAL ISSUE	B
22/08/2019	ISSUE FOR REVIEW	A

PROJECT TITLE

TOWN OF COTTESLOE

RAILWAY CORRIDOR GREENING DESIGN

COTTESLOE, WA

DRAWING TITLE

PLANTING PLAN

PROJECT NO.	SCALE @ A3	PLOT DATE	REVISION
1912	AS SHOWN	04/09/2019	B

FILE PATH
P:\07 PROJECTS COMMERCIAL\1912 TOC RAIL CORRIDOR GREENING\08 DRAWINGS\02 JBA\03 DETAILED DESIGN\04 SHEET SET MANAGER

DRAWN	CHECKED	APPROVED	DRAWING NO.
MC	PV	MG	DD-214

JOSH BYRNE & ASSOCIATES
LANDSCAPE • SUSTAINABILITY • COMMUNICATIONS

08 9433 3721
Suite 109, Atwell Buildings
3 Cantonment Street, Fremantle WA 6160
PO Box 1866, Fremantle WA 6959
www.joshbyrne.com.au

NOTE: CHECK ALL DIMENSIONS ON SITE PRIOR TO COMMENCING WORK. WRITTEN DIMENSIONS SHALL TAKE PRECEDENCE. ALL DRAWINGS TO BE READ IN CONJUNCTION WITH MANUFACTURERS AND CONSULTANTS DOCUMENTATION AND SPECIFICATION. REPORT ANY DISCREPANCIES TO LANDSCAPE ARCHITECT BEFORE PROCEEDING WITH WORK.

COPYRIGHT ©: THIS DOCUMENT MAY ONLY BE USED FOR THE PURPOSE FOR WHICH IT WAS COMMISSIONED IN ACCORDANCE WITH THE TERMS OF ENGAGEMENT.

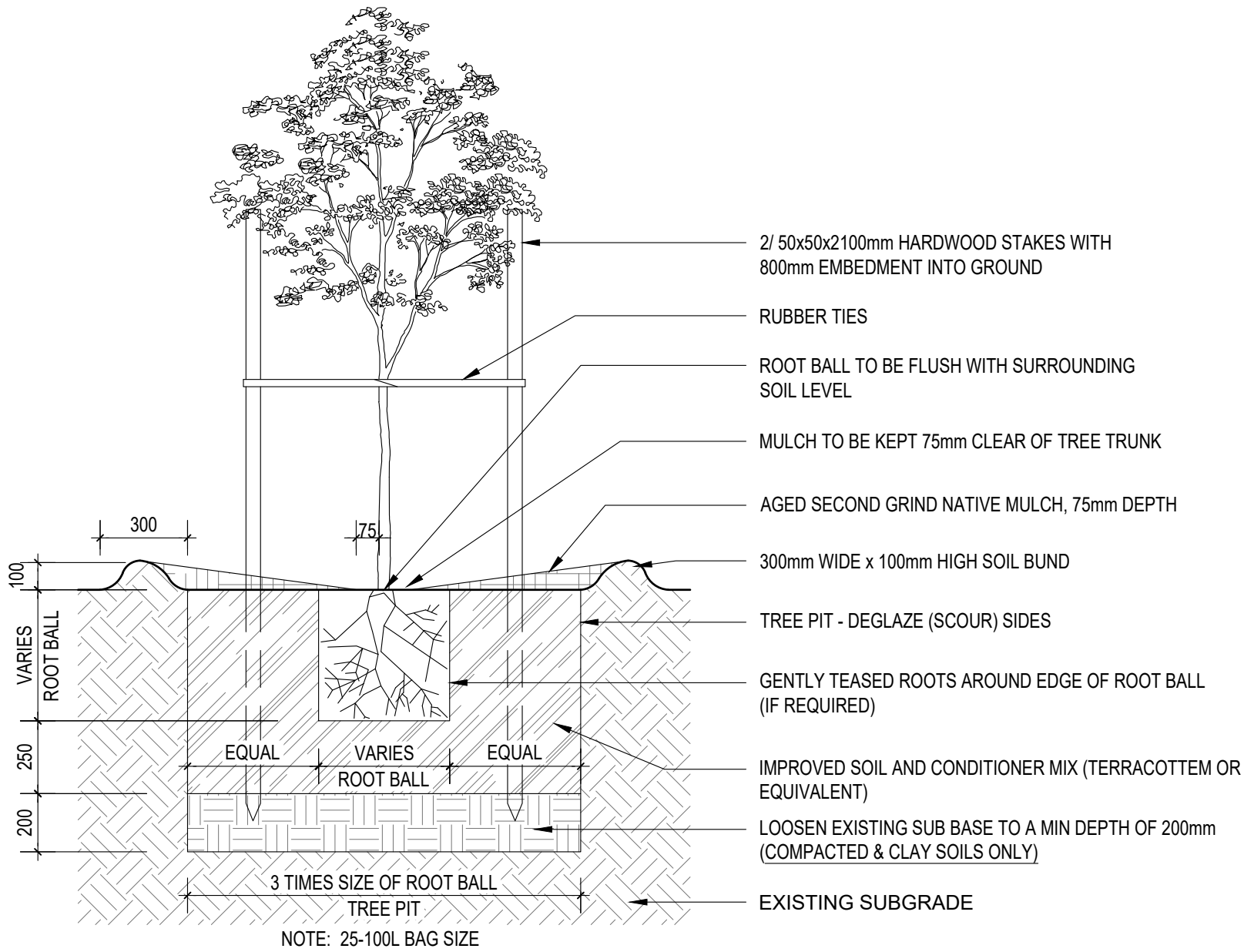

01 DD-300 TYPICAL DETAIL - TREE PLANTING
SCALE: 1:20

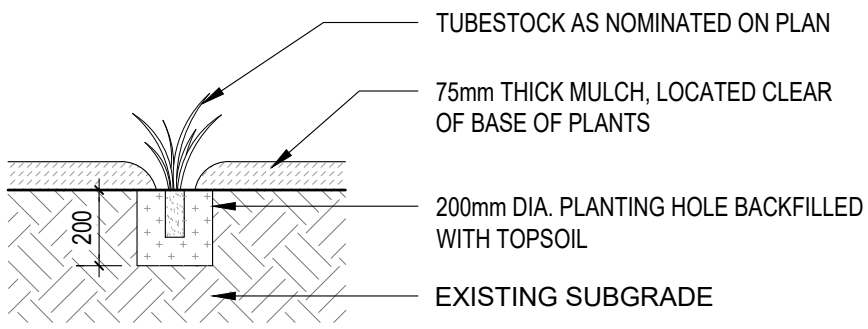

02 DD-300 TYPICAL DETAIL - TUBESTOCK (STRAPPY PLANTS)
SCALE: 1:20

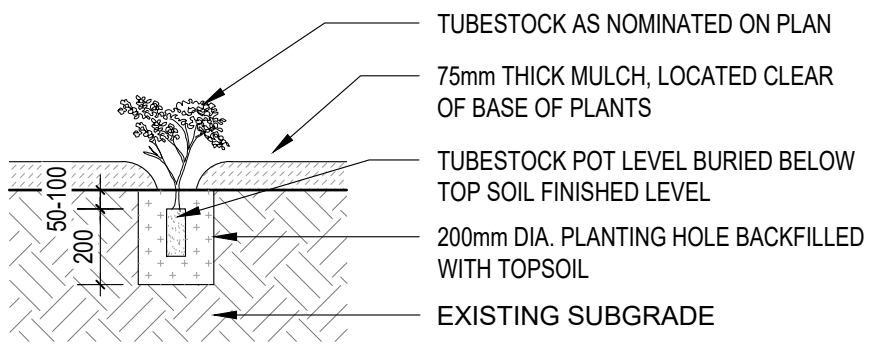

03 DD-300 TYPICAL DETAILS - TUBESTOCK (WOODY PLANTS)
SCALE: 1:20

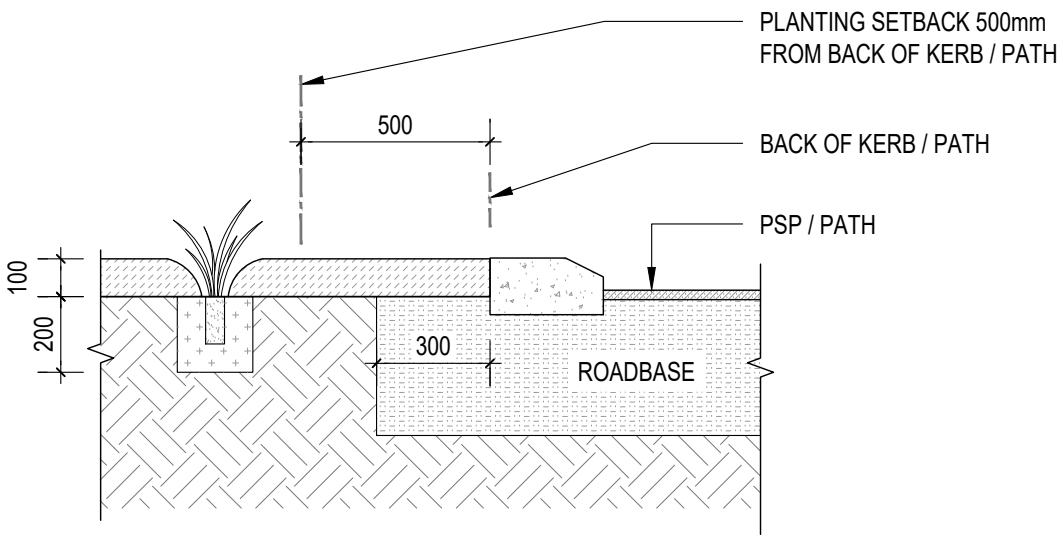

NOTE: DO NOT BREAK UP OR DISTURB ROAD BASE WITHIN 300mm FROM THE BACK OF KERB.

04 DD-300 TYPICAL DETAIL - PLANTING SETBACK
SCALE: 1:20

0 0.2 0.4 0.6 0.8 1m
1:20

FINAL ISSUE

---	---	---
---	---	---
---	---	---
---	---	---
---	---	---
---	---	---
---	---	---
---	---	---
04/09/2019	FINAL ISSUE	B
22/08/2019	ISSUE FOR REVIEW	A
DATE	DESCRIPTION	REV

PROJECT TITLE
TOWN OF COTTESLOE
RAILWAY CORRIDOR GREENING DESIGN
COTTESLOE, WA

DRAWING TITLE
TYPICAL DETAILS

PROJECT NO.	SCALE @ A3	PLOT DATE	REVISION
1912	AS SHOWN	04/09/2019	B

FILE PATH
P:\07 PROJECTS COMMERCIAL\1912 TOC RAIL CORRIDOR GREENING\08 DRAWINGS\02 JBA\03 DETAILED DESIGN\04 SHEET SET MANAGER

DRAWN	CHECKED	APPROVED	DRAWING NO.
MC	PV	MG	DD-300

JOSH BYRNE & ASSOCIATES
LANDSCAPE • SUSTAINABILITY • COMMUNICATIONS
08 9433 3721
Suite 109, Atwell Buildings
3 Cantonment Street, Fremantle WA 6160
PO Box 1866, Fremantle WA 6959
www.joshbyrne.com.au

NOTE: CHECK ALL DIMENSIONS ON SITE PRIOR TO COMMENCING WORK. WRITTEN DIMENSIONS SHALL TAKE PRECEDENCE. ALL DRAWINGS TO BE READ IN CONJUNCTION WITH MANUFACTURERS AND CONSULTANTS DOCUMENTATION AND SPECIFICATION. REPORT ANY DISCREPANCIES TO LANDSCAPE ARCHITECT BEFORE PROCEEDING WITH WORK.

COPYRIGHT ©: THIS DOCUMENT MAY ONLY BE USED FOR THE PURPOSE FOR WHICH IT WAS COMMISSIONED IN ACCORDANCE WITH THE TERMS OF ENGAGEMENT.

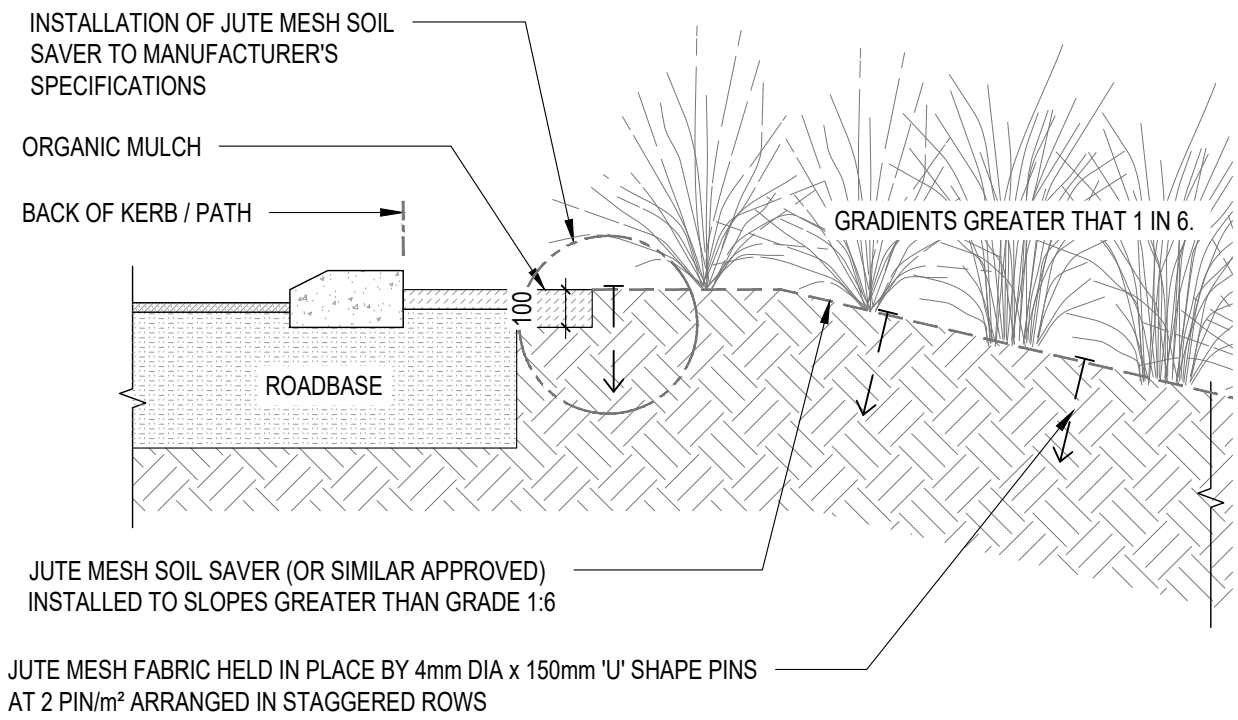

01 DD-301 TYPICAL DETAIL - JUTE MESH TO SLOPE AT PSP
SCALE: 1:20

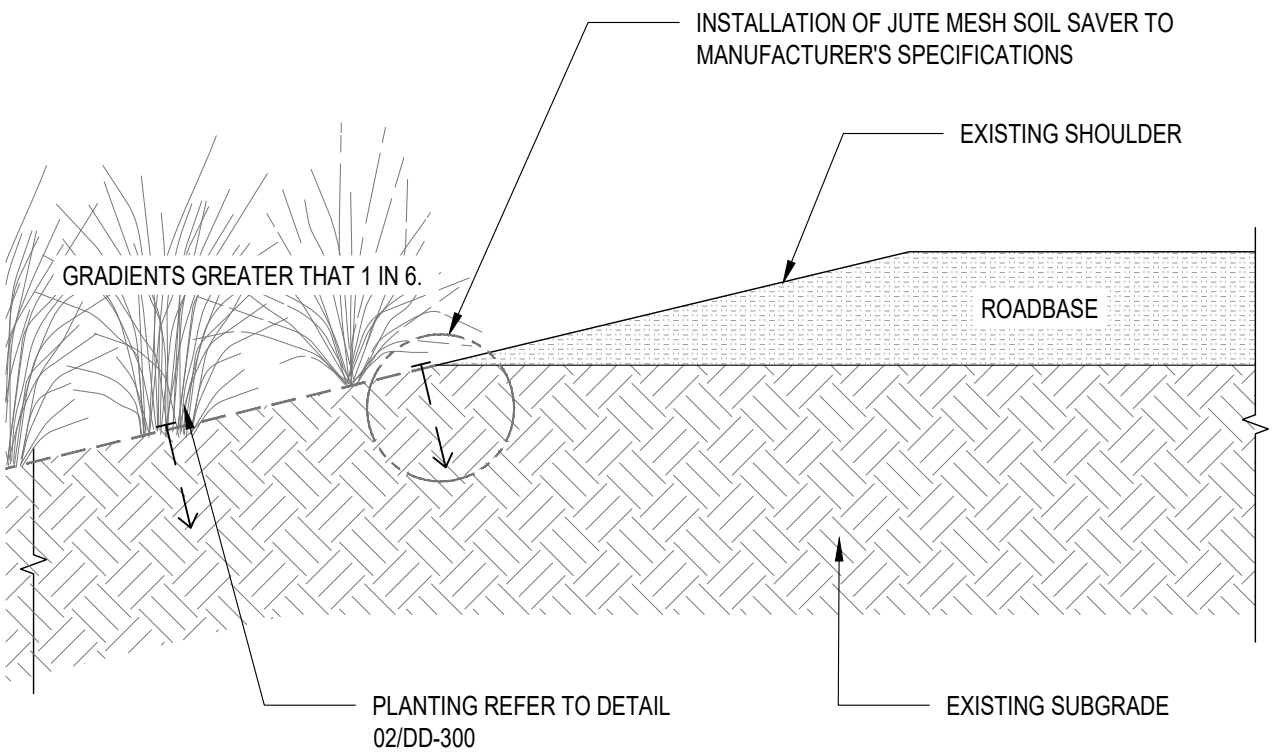

02 DD-301 TYPICAL DETAIL - JUTE MESH TO SLOPE AT SHOULDER
SCALE: 1:20

0 0.2 0.4 0.6 0.8 1m
1:20

FINAL ISSUE

DATE	DESCRIPTION	REV
---	---	---
---	---	---
---	---	---
---	---	---
---	---	---
---	---	---
---	---	---
---	---	---
04/09/2019	FINAL ISSUE	B
22/08/2019	ISSUE FOR REVIEW	A

PROJECT TITLE
TOWN OF COTTESLOE
RAILWAY CORRIDOR GREENING DESIGN
COTTESLOE, WA

DRAWING TITLE
TYPICAL DETAILS

PROJECT NO.	SCALE @ A3	PLOT DATE	REVISION
1912	AS SHOWN	04/09/2019	B

FILE PATH
P:\07 PROJECTS COMMERCIAL\1912 TOC RAIL CORRIDOR GREENING\08 DRAWINGS\02 JBA\03 DETAILED DESIGN\04 SHEET SET MANAGER

DRAWN	CHECKED	APPROVED	DRAWING NO.
MC	PV	MG	DD-301

JOSH BYRNE & ASSOCIATES
LANDSCAPE • SUSTAINABILITY • COMMUNICATIONS
08 9433 3721
Suite 109, Atwell Buildings
3 Cantonment Street, Fremantle WA 6160
PO Box 1866, Fremantle WA 6959
www.joshbyrne.com.au

NOTE: CHECK ALL DIMENSIONS ON SITE PRIOR TO COMMENCING WORK. WRITTEN DIMENSIONS SHALL TAKE PRECEDENCE. ALL DRAWINGS TO BE READ IN CONJUNCTION WITH MANUFACTURERS AND CONSULTANTS DOCUMENTATION AND SPECIFICATION. REPORT ANY DISCREPANCIES TO LANDSCAPE ARCHITECT BEFORE PROCEEDING WITH WORK.

COPYRIGHT ©: THIS DOCUMENT MAY ONLY BE USED FOR THE PURPOSE FOR WHICH IT WAS COMMISSIONED IN ACCORDANCE WITH THE TERMS OF ENGAGEMENT.

LANDSCAPING NOTES
SOFT WORKS

PROTECTION OF TREES

- PROTECT & RETAIN EXISTING TREES, TO COMPLY WITH 'AS 4970-2009 - PROTECTION OF TREES ON DEVELOPMENT SITES' & ' AS 4373 - PRUNING OF AMENITY TREES'
- ALL EXCAVATIONS WITHIN A 5m RADIUS OF ALL TREE TRUNKS ARE TO BE PRECEDED BY HAND DIGGING ON THE TREE SIDE OF ANY TRENCH TO THE DEPTH OF EXCAVATION REQUIRED.
- ALL TREE ROOTS UP TO 25mm IN DIAMETER MUST BE CUT WITH SHARP SECATEURS ON THE TREE SIDE OF THE EXCAVATION
- NO TREE ROOT LARGER THAN 25mm SHALL BE CUT UNTIL PHOTOGRAPHIC EVIDENCE HAS BEEN EMAILED TO THE SUPERINTENDENT AND APPROVAL TO CUT HAS BEEN GRANTED. GENERALLY, ROOTS GREATER THAN 25mm SHOULD BE LEFT IN TRENCH AND SERVICES WORKED AROUND THEM.
- UNDER NO CIRCUMSTANCES SHOULD ROOTS BE TORN OR PULLED FROM THE GROUND PRIOR TO CUTTING.
- TAKE ALL NECESSARY PRECAUTIONS TO PROTECT TREES AND VEGETATION, INCLUDING THE FOLLOWING:
- DO NOT STORE MATERIALS UNDER OR NEAR TREES.
- DO NOT PARK VEHICLES, MACHINES, TOOLS, ETC UNDER TREES.
- DO NOT DAMAGE TREE BARK OR OVER HANGING BRANCHES ETC.
- DO NOT CUT TREE ROOTS EXCEEDING 25mm DIAMETER UNLESS APPROVED BY THE SUPERINTENDENT.

SOIL CONDITIONER

TERRACOTTEM OR EQUIVALENT: A HIGH QUALITY SOIL CONDITIONER

APPLICATION: FOR NON TUBE STOCK TREES ONLY. APPLY AS PER MANUFACTURER'S RECOMMENDATIONS.REFER DETAIL 01-DD300

FOR IRRIGATED SHRUBS AREAS: INSTALL 50MM THICK SOIL CONDITIONER TO ALL LAWN AND EXOTIC PLANT AREAS AND BLEND WITH TOP 200MM OF SITE SOIL PRIOR TO PLANTING.

SOIL WETTING AGENT

PRODUCT NAME/BRAND: SURFACTANT TYPE SOIL WETTING AGENT SUCH AS RICHGRO "EZI-WET", OR EQUIVALENT APPROVED BY THE SUPERINTENDENT,

APPLICATION: AS PER MANUFACTURER'S RECOMMENDATIONS TO ALL PLANTING AREAS.

CONTAINERISED SHRUBS/TUBE STOCK

THE CONTRACTOR SHALL SELECT THE CONTAINERISED PLANTS TO THE FOLLOWING SPECIFICATION:

- PLANT STOCK MUST BE IN A HEALTHY VIGOROUS CONDITION, AT THE HEIGHTS/SIZES SPECIFIED
- FREE FROM DISEASE, INJURY, INSECTS, ALL WEEDS AND ROOTS OF WEEDS;
- NO PLANT WILL BE ACCEPTED WHICH IS UNHEALTHY, DAMAGED, MALFORMED, HAS NOT BEEN ADEQUATELY HARDENED OFF OR IS OTHERWISE INFERIOR IN QUALITY, OR WHICH DOES NOT CONFORM IN ANY WAY WITH THE PLANTS SPECIFIED. PLANTS WITH ABRASIONS OF THE BARK, SUNSCALDS, DISFIGURING KNOTS, OR FRESH CUTS OF LIMBS OVER 20MM, WHICH HAVE NOT COMPLETELY CALLUSED, WILL BE REJECTED. THESE PLANTS WILL BE REJECTED AND REPLACED BY THE CONTRACTOR AT NO COST;
- ROOTS SHALL BE WELL-DEVELOPED WITHIN CONTAINERS;
- PLANTS SHALL NOT BE PRUNED BEFORE DELIVERY;
- ONE (1) SAMPLE OF PLANT STOCK MUST BE SUBMITTED TO THE SUPERINTENDENT PROVING NO ROOT BOUND CONDITION EXISTS;
- NO SUBSTITUTION SHALL BE MADE WITHOUT WRITTEN APPROVAL OF THE SUPERINTENDENT ;
- IT IS THE RESPONSIBILITY OF THE CONTRACTOR TO ENSURE THAT PLANT MATERIALS ARE OF THE NUMBER, SPECIES AND VARIETY, SIZE AND CONDITION AS SET OUT IN THE DRAWINGS.
- THE CONTRACTOR SHALL ARRANGE WITH THE SUPERINTENDENT FOR A SITE INSPECTION OF ALL MATERIAL FROM THE SOURCE, NURSERIES AT ONE HOLDING AREA.

CONTAINERISED TREES - 5L POT SIZE AND GREATER

THE CONTRACTOR SHALL SELECT THE CONTAINERISED TREES TO THE FOLLOWING SPECIFICATION:

- ALL STOCK MUST BE SELF-SUPPORTING, HAVE A TAPERED STEM AND HAVE THE ABILITY TO BEND THE MAIN STEM OVER BY 30 DEGREES WITHOUT FALLING OVER;
- ONE (1) SAMPLE OF PLANT AND TREE STOCK MUST BE SUBMITTED TO THE SUPERINTENDENT PROVING NO ROOT BOUND CONDITION EXISTS;
- TREE STOCK MUST BE IN A HEALTHY VIGOROUS CONDITION AT THE SIZES SPECIFIED;
- FREE FROM DISEASE, INJURY, INSECTS, ALL WEEDS AND ROOTS OF WEEDS;
- IT IS THE RESPONSIBILITY OF THE CONTRACTOR TO ENSURE THAT PLANT MATERIALS ARE OF THE NUMBER, SPECIES AND VARIETY, SIZE AND CONDITION AS SET OUT IN THE DRAWINGS;
- NO SUBSTITUTION SHALL BE MADE WITHOUT WRITTEN APPROVAL OF THE SUPERINTENDENT .
- THE CONTRACTOR SHALL ARRANGE WITH THE SUPERINTENDENT FOR A SITE INSPECTION OF ALL MATERIAL FROM THE SOURCE, NURSERIES AT ONE HOLDING AREA

TREE STAKES AND TIES

THE FOLLOWING OUTLINES THE REQUIREMENTS FOR TREE STAKES AND TIES DEPENDING ON THE SIZE OF THE TREE;

- 25-100L TREE STOCK REQUIRES TWO (2) 50X50X2100MM LONG HARDWOOD TIMBER OR RECYCLED PLASTIC BLACK TREE STAKES;
- ALL STAKED TREES MUST USE A HEAVY-DUTY FLAT FLEXIBLE BLACK PLASTIC TREE TIE. RECOMMENDED PRODUCT 'HEAVY DUTY FLAT TREE TIE (PRODUCT CODE FT400-18) FROM GREENWAY ENTERPRISES (PH. 08 9358 5045)

MULCH

ALL MULCH IS TO BE:

- FREE FROM PERENNIAL WEEDS AND THEIR ROOTS, BULBS OR RHIZOMES
- FREE FROM ROCKS OR STONES, AND BUILDING RUBBLE, INCLUDING BRICKS, CONCRETE, PLASTER, TIMBER, OIL OR ANY OTHER MATTER DELETERIOUS TO PLANT GROWTH
- FREE FROM DETRIMENTALLY HIGH SALT CONTENT LEVELS
- COMPRISED TOTALLY OF ORGANIC MATTER AND FREE FROM SILT MATERIAL.
- FOR GARDEN BEDS OUTSIDE OF IMPACT AREAS APPLY 75MM THICK SEASONED NATIVE WOOD MULCH TO ALL NEW GARDEN AREAS

REQUIREMENTS FOR JUTE MATTING

IT IS RECOMMENDED THAT JUTE MATTING BE INSTALLED ON GRADIENTS GREATER THAN 1 IN 6.

IT IS THE RESPONSIBILITY OF THE CONTRACTOR TO CONFIRM THE GRADIENTS OF ALL EMBANKMENTS FOR JUTE MATTING REQUIREMENTS.

FINAL ISSUE

----	----	----
----	----	----
----	----	----
----	----	----
----	----	----
----	----	----
----	----	----
----	----	----
----	----	----
04/09/2019	FINAL ISSUE	A
DATE	DESCRIPTION	REV

PROJECT TITLE
TOWN OF COTTESLOE
RAILWAY CORRIDOR GREENING DESIGN
COTTESLOE, WA

DRAWING TITLE
SPECIFICATIONS

PROJECT NO.	SCALE @ A3	PLOT DATE	REVISION
1912	AS SHOWN	04/09/2019	A

FILE PATH
P:\07 PROJECTS COMMERCIAL\1912 TOC RAIL CORRIDOR GREENING\08 DRAWINGS\02 JBA\03 DETAILED DESIGN\04 SHEET SET MANAGER

DRAWN	CHECKED	APPROVED	DRAWING NO.
MC	PV	MG	DD-400

JOSH BYRNE & ASSOCIATES
LANDSCAPE • SUSTAINABILITY • COMMUNICATIONS
08 9433 3721
Suite 109, Atwell Buildings
3 Cantonment Street, Fremantle WA 6160
PO Box 1866, Fremantle WA 6959
www.joshbyrne.com.au

NOTE: CHECK ALL DIMENSIONS ON SITE PRIOR TO COMMENCING WORK. WRITTEN DIMENSIONS SHALL TAKE PRECEDENCE. ALL DRAWINGS TO BE READ IN CONJUNCTION WITH MANUFACTURERS AND CONSULTANTS DOCUMENTATION AND SPECIFICATION. REPORT ANY DISCREPANCIES TO LANDSCAPE ARCHITECT BEFORE PROCEEDING WITH WORK.

COPYRIGHT ©: THIS DOCUMENT MAY ONLY BE USED FOR THE PURPOSE FOR WHICH IT WAS COMMISSIONED IN ACCORDANCE WITH THE TERMS OF ENGAGEMENT.